Local regulations may restrict the use of this product to below the conditions quoted.
In the interests of development and improvement of the product, we reserve the right to change the specification without notice. © Copyright 2025

SV418 Series Bronze Safety Valves ASME Section VIII - NB Certified for Air, Gas, Steam and Liquid

Description

Spirax Sarco's SV418 safety and relief valve is designed for accuracy and reliability. Engineered for heavy-duty industrial usage. Multiple purpose safety and relief for Liquid, Steam, Air, and Gas services. ASME and National Board Certified for Section VIII service. ASME Section VIII to 750 psi (51.7 bar) for Liquid, Air, and Gas. 300 PSI for Steam.

Sizes from ½" to 3"; NB rated to 750#; Temperatures from -320 °F to 425 °F (-196 °C to 218 °C).

Features

- Full nozzle – top guided design
- Short, precise blow-down
- Wide choice of inlet/outlet sizes
- Excellent reseating characteristics
- Designed long term heavy industrial use
- Closed hex cap
- Back pressure tight
- Drainhole with threaded plug

Options

- BSPT piping
- O2 Cleaning and cryogenic services

Usages

Pressure Vessels, Pumps, Hydraulics, Tanks, Steam Systems, Chemical, Cryogenic, Air and Gas Compressors, Separators, by-pass and over pressure protection. Choose for most industrial applications requiring a safety relief valve.

Materials

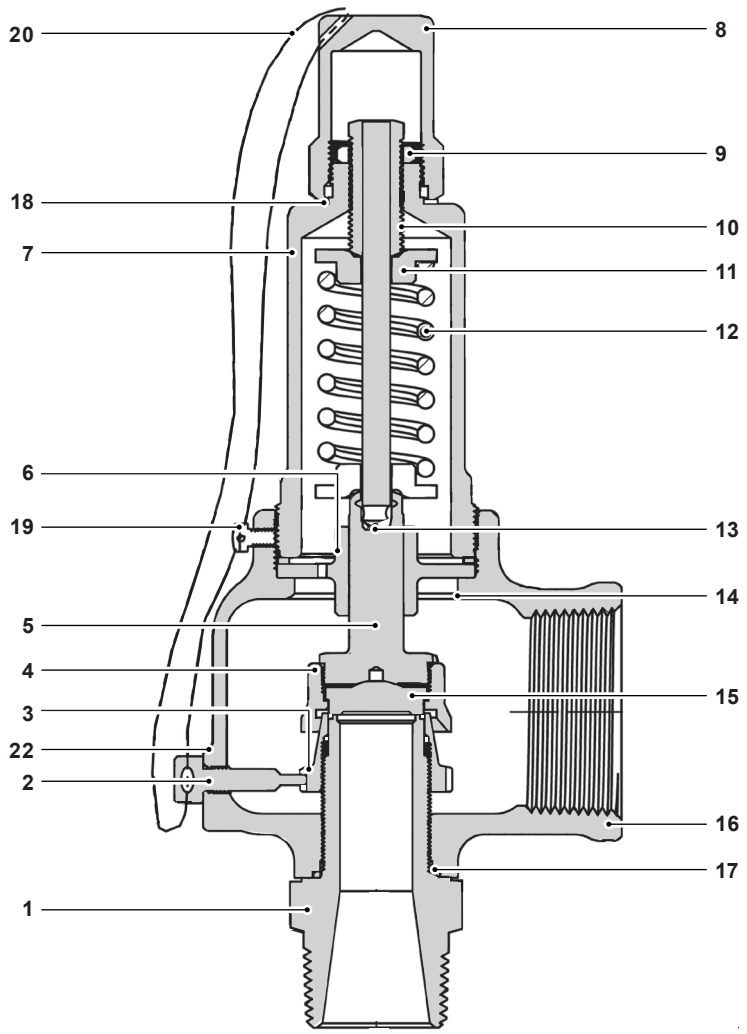

Item	Description	Series 418
1	Nozzle	SS
2	Lock screw	Brass
3	Lift	SS 316
4	Disk holder	SS 316
5	Disk holder shaft	SS 316
6	Disc guide	Brass
7	Bonnet	Bronze
8	Hood	Brass
9	Lock nut	Brass
10	Pressure screw	Brass
11	Spring plate	Brass

Item	Description	Series 418
12	Spring	SS 717
13	Spring post	Brass
14	Disc Guide Washer	PTFE
15	Disc	SS 316
16	Body	Bronze
17	Nozzle washer	PTFE
18	Gasket	PTFE
19	Lock screw	Brass
20	Seal wire	Steel
21	Nameplate	SS
22	Drain Plug	SS

Dimensions/weights (approximate) in inches and lbs (kg)

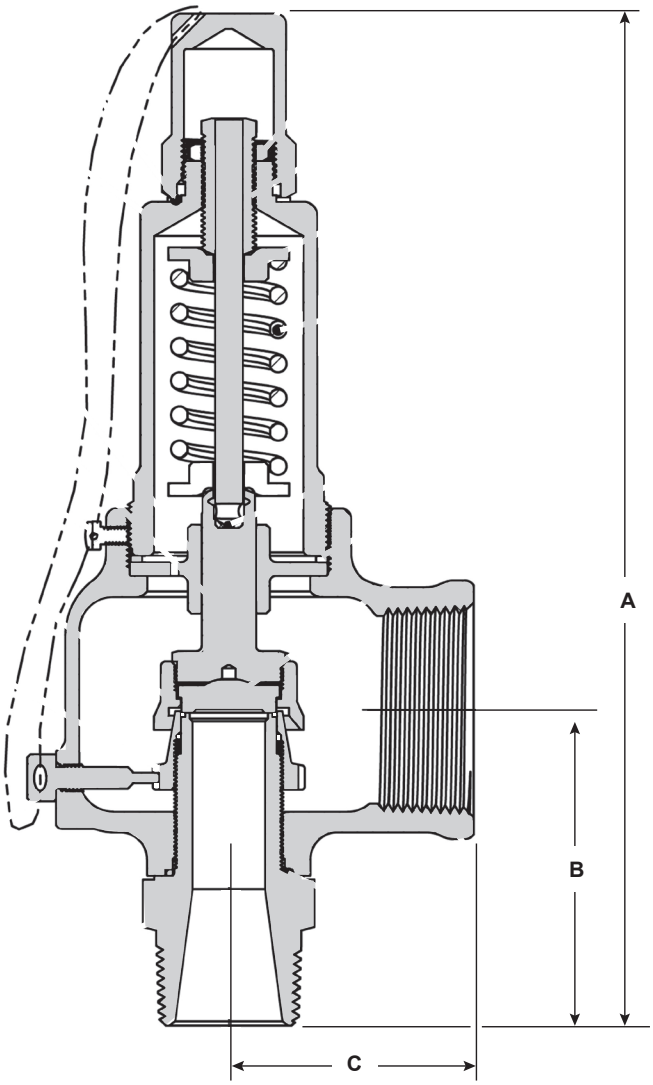

Orifice	Inlet	Outlet	Flow area	Size ID	A - Closed Cap	A - Lift Lever	B	C	Weight
D	½"	¾"	0.125	DC	7⅜"	8⅛"	2⅜"	1⅝"	2 lbs (0.91 kg)
D	½"	1"	0.125	DD	7⅜"	8⅛"	2⅜"	1⅝"	
D	¾"	¾"	0.125	DE	7⅜"	8⅛"	2⅜"	1⅝"	
D	¾"	1"	0.125	DF	7⅜"	8⅛"	2⅜"	1⅝"	
D	1"	1"	0.125	DG	7½"	8½"	2⅜"	1⅝"	
E	¾"	1"	0.221	EC	7⅝"	8⅜"	2⅝"	1⅝"	3 lbs (1.36 kg)
E	¾"	1¼"	0.221	ED	8⅛"	8⅞"	2⅝"	2"	
E	1"	1¼"	0.221	EF	8⅛"	9¼"	2⅝"	2"	
F	1"	1½"	0.353	FF	9⅝"	9⅝"	2⅞"	2¼"	5 lbs (2.27 kg)
F	1½"	1½"	0.353	FG	9⅝"	9⅝"	3⅛"	2¼"	
G	1¼"	2"	0.554	GG	10"	10¾"	3⅜"	2⅝"	9 lbs (4.08 kg)
G	2"	2"	0.554	GF	10¼	11"	3⅜"	2⅝"	
H	1½"	2½"	0.923	HH	11¾"	12⅛"	3½"	2¾"	16 lbs (7.26 kg)
J	2"	3"	1.421	JJ	13½"	14"	4"	3¼"	24 lbs (10.9 kg)

Sample specification

Spirax Sarco SV418: As required for equipment according to ASME Boiler and Pressure Vessel Code. Stainless steel full nozzle, top guided design. Stainless steel ring and disk. Stainless steel spring with adjustable pressure range and positive shutoff, factory set and sealed. Back pressure tight, includes drainhole with threaded plug.

Installation

Valve should be installed in vertical upright position as close as possible to the connection provided with no unnecessary intervening pipe or fitting. Under no circumstances should there be a shut off valve or restriction of any kind between the safety valve and the connection provided. For full details on proper installation, please refer to the installation, operating and maintenance instructions, IM-3-215-US.

Maintenance

This product is factory sealed for tamper-proof operation, and no repair parts are available. Test the safety valve every 6 months (depending on plant age and condition), preferably by raising the system pressure to the safety valve's set pressure or operating the hand lever. For full details on proper maintenance, please refer to the installation, operating and maintenance instructions, IM-3-215-US.

Nameplate identification

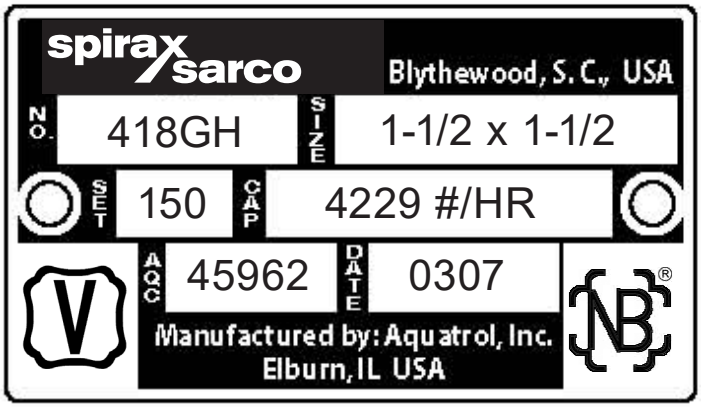

NO =	Model Identification
G =	Orifice
H =	Piping Size
SIZE =	M x F Piping Size
SET =	Set Pressure (psig)
CAP =	SCFM Air/Gas
AQC =	Internal Tracking (QA)
DATE =	Month/Year
V =	Fired Vessel (Sec. I)
UV =	Unfired Vessel (Sec. VIII)
NB =	National Board Certified

Series 418 Capacities - Liquid • GPM

Capacity ratings based on 10% over pressure of water (liquid) NB certified at 90% of measured flow in GPM.

Set pressure psi	Orifice D 0.257	Orifice E 0.2173	Orifice F 0.3526	Orifice G 0.5542	Orifice H 0.9229	Orifice J 1.418
5	11	18	30	47	78	120
10	14	24	38	60	100	154
15	16	28	45	71	118	181
20	18	31	51	80	133	204
25	20	35	56	88	147	225
30	22	37	61	96	159	245
35	23	40	66	103	172	264
40	25	43	70	110	184	283
45	27	46	75	117	195	300
50	28	48	79	123	206	316
55	29	51	82	129	216	331
60	31	53	86	135	225	346
65	32	55	90	141	234	360
70	33	57	93	146	243	374
75	34	59	96	151	252	387
80	35	61	99	156	260	400
85	37	63	102	161	268	412
90	38	65	105	166	276	424
95	39	67	108	170	283	435
100	40	68	111	175	291	447
125	44	77	124	195	325	499
150	48	84	136	214	356	547
175	52	91	147	231	385	591
200	56	97	157	247	411	632
225	59	103	167	262	436	670
250	63	108	176	276	460	706
275	66	114	184	290	482	741
300	69	119	192	302	504	774
325	71	123	200	315	524	805
350	74	128	208	327	544	836
375	77	133	215	338	563	865
400	79	137	222	349	581	893
425	82	141	229	360	599	921
450	84	145	236	370	617	948
475	86	149	242	380	634	974
500	89	153	248	390	650	999
525	91	157	254			
550	93	161	260			
575	95	164	266			
600	97	168	272			
625	99	171				
650	101	175				
675	103	178				
700	105	181				
725	107	184				
750	108	187				

Series 418 Capacities - Air • SCFM

Capacity ratings based on SCFM (standard cubit feet per minute) of Air at 10% over pressure.
NB certified at 90% of measured flow.

Set pressure psi	Orifice D 0.257	Orifice E 0.2173	Orifice F 0.3526	Orifice G 0.5542	Orifice H 0.9229	Orifice J 1.418
5	46	79	129	202	337	518
10	56	97	157	247	411	632
15	66	114	186	292	486	746
20	76	132	214	336	560	860
25	86	149	242	381	634	975
30	97	167	271	425	709	1089
35	108	186	302	475	790	1214
40	119	205	333	524	872	1340
45	130	225	364	573	954	1465
50	141	244	396	622	1035	1591
55	152	263	427	671	1117	1716
60	163	282	458	720	1199	1842
65	174	301	489	769	1280	1967
70	186	321	520	818	1362	2093
75	197	340	552	867	1444	2218
80	208	359	583	916	1525	2344
85	219	378	614	965	1607	2469
90	230	398	645	1014	1689	2595
95	241	417	676	1063	1771	2720
100	252	436	708	1112	1852	2846
125	308	532	864	1358	2261	3474
150	364	628	1020	1603	2669	4101
175	419	725	1176	1848	3078	4729
200	475	821	1332	2093	3486	5356
225	530	917	1488	2339	3895	5984
250	586	1013	1644	2584	4303	6612
275	642	1109	1800	2829	4712	7239
300	697	1206	1956	3075	5120	7867
325	753	1302	2112	3320	5529	8494
350	809	1398	2268	3565	5937	9122
375	864	1494	2424	3810	6346	9750
400	920	1590	2580	4056	6754	10377
425	976	1686	2736	4301	7162	11005
450	1031	1783	2893	4546	7571	11632
475	1087	1879	3049	4792	7979	12260
500	1142	1975	3205	5037	8388	12888
525	1198	2071	3361			
550	1254	2167	3517			
575	1309	2263	3673			
600	1365	2360	3829			
625	1421	2456				
650	1476	2552				
675	1532	2648				
700	1588	2744				
725	1643	2841				
750	1699	2937				

Series 418 Capacities - Steam • Lbs/Hr

Capacity ratings based on pounds per hour of saturated steam at 10% over pressure.
NB certified at 90% of accumulated flow.

Set pressure psi	Orifice D 0.257	Orifice E 0.2173	Orifice F 0.3526	Orifice G 0.5542	Orifice H 0.9229	Orifice J 1.418
5	129	223	362	569	947	1455
10	157	272	442	694	1156	1776
15	186	321	521	819	1365	2097
20	214	370	601	945	1573	2417
25	243	420	681	1070	1782	2738
30	271	469	761	1195	1991	3058
35	302	523	848	1333	2220	3411
40	334	577	936	1471	2450	3764
45	365	631	1024	1609	2679	4116
50	396	685	1111	1747	2909	4469
55	427	739	1199	1884	3138	4822
60	459	793	1287	2022	3368	5174
65	490	847	1374	2160	3597	5527
70	521	901	1462	2298	3827	5880
75	552	955	1550	2436	4056	6232
80	584	1009	1637	2574	4286	6585
85	615	1063	1725	2711	4515	6938
90	646	1117	1813	2849	4745	7290
95	678	1171	1900	2987	4974	7643
100	709	1225	1988	3125	5204	7995
110	771	1333	2164	3401	5663	8701
120	834	1441	2339	3676	6122	9406
130	896	1550	2514	3952	6581	10111
140	959	1658	2690	4227	7040	10817
150	1021	1766	2865	4503	7499	11522
160	1084	1874	3040	4779	7958	12227
170	1146	1982	3216	5054	8417	12933
180	1209	2090	3391	5330	8876	13638
190	1271	2198	3567	5606	9335	14343
200	1334	2306	3742	5881	9794	15048
210	1397	2414	3917	6157	10253	15754
220	1459	2522	4093	6433	10712	16459
230	1522	2630	4268	6708	11171	17164
240	1584	2738	4443	6984	11630	17870
250	1647	2846	4619	7260	12089	18575
260	1709	2955	4794	7535	12548	19280
270	1772	3063	4970	7811	13007	19985
280	1834	3171	5145	8087	13467	20691
290	1897	3279	5320	8362	13926	21396
300	1959	3387	5496	8638	14385	22101