Local regulations may restrict the use of this product to below the conditions quoted.
In the interests of development and improvement of the product, we reserve the right to change the specification without notice. © Copyright 2025

Pilot Operated Temperature Regulator with Electric Override ½" to 4" 25TE

Description

The 25TE has all of the features of the 25T, with the addition of an electric pilot. An electrical signal can override the temperature pilot to provide a remote shut-off capability.
Note: For pressures below 15 psi g (1 bar g), the E pilot is not recommended for use with valves 2½" (DN65) and larger.

Model	**25TE**			
Sizes	½" to 2" (DN15 to DN50)	2½", 3", 4" (DN65, DN80, DN100)	½" to 2" (DN15 to DN50)	2", 2 1/2", 3" 4" (DN50, DN65, DN80, DN100)
Connections	NPT	ANSI 125	NPT	ANSI 300
Construction	Cast iron		Cast steel	
Options		ANSI 250		ANSI 150 (excludes 2")
	Standard capillary tubing available in 8' and 15' lengths. Consult the factory for non-standard capillary tubing lengths available in 5' increments, up to 50' (15 m). (see TI-P235-07-US)			
Electric pilot specifications	Enclosure: NEMA 2, 3, 3S, 4, & 4X 120 VAC / 60 Hz Holding: 23 VAC Inrush: 45 VAC Normally Closed PMO: 200 psi g (13.8 bar g) TMO: 388 °F (198 °C)			
Electric pilot options	240 VAC / 60Hz 24 VAC / 60 Hz For faster response time PMO: 140 psi g (9.7 bar g) TMO: 361 °F (183 °C)			

½" to 2"

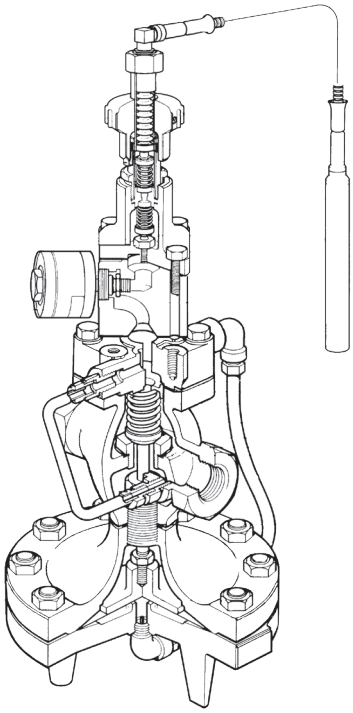

2"* to 4"
***ANSI 300 ONLY**

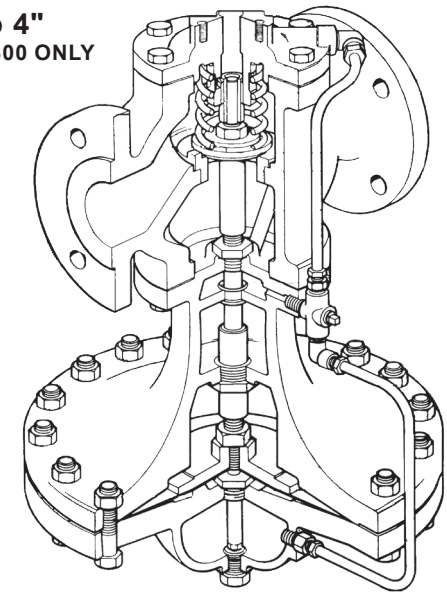

Typical applications

Temperature control applications where the valve must also respond to an electrical program timer, safety or limit switch, or remote manual switch.

Limiting operating conditions

PMO	Maximum operating pressure	NPT	200 psi g (14 bar g) @ 392 °F (200 °C)
		ANSI 125	125 psi g (9 bar g) @ 392 °F (200 °C)
		ANSI 250	200 psi g (14 bar g) @ 392 °F (200 °C)
		ANSI 150	185 psi g (13 bar g) @ 392 °F (200 °C)
		ANSI 300	200 psi g (14 bar g) @ 392 °F (200 °C)
Maximum operating temperature (The temperature of the sensing bulb must not exceed 350 °F (177 °C))			392 °F (200 °C)

Standard temperature ranges

30 °F to 90 °F	(0 °C to 32 °C)
60 °F to 120 °F	(16 °C to 49 °C)
100 °F to 160 °F	(38 °C to 71 °C)
120 °F to 180 °F	(49 °C to 82 °C)
160 °F to 220 °F	(71 °C to 104 °C)
200 °F to 260 °F	(93 °C to 127 °C)
260 °F to 320 °F	(127 °C to 160 °C)

Pressure shell design conditions

PMA	Maximum allowable pressure	Cast iron	250 psi g @ 450 °F	(17 bar g @ 232 °C)
		Cast steel	300 psi g @ 450 °F	(20 bar g @ 232 °C)
TMA	Maximum allowable temperature	Cast iron	450 °F @ 250 psi g	(232 °C @ 17 bar g)
		Cast steel	450 °F @ 300 psi g	(232 °C @ 20 bar g)

Materials

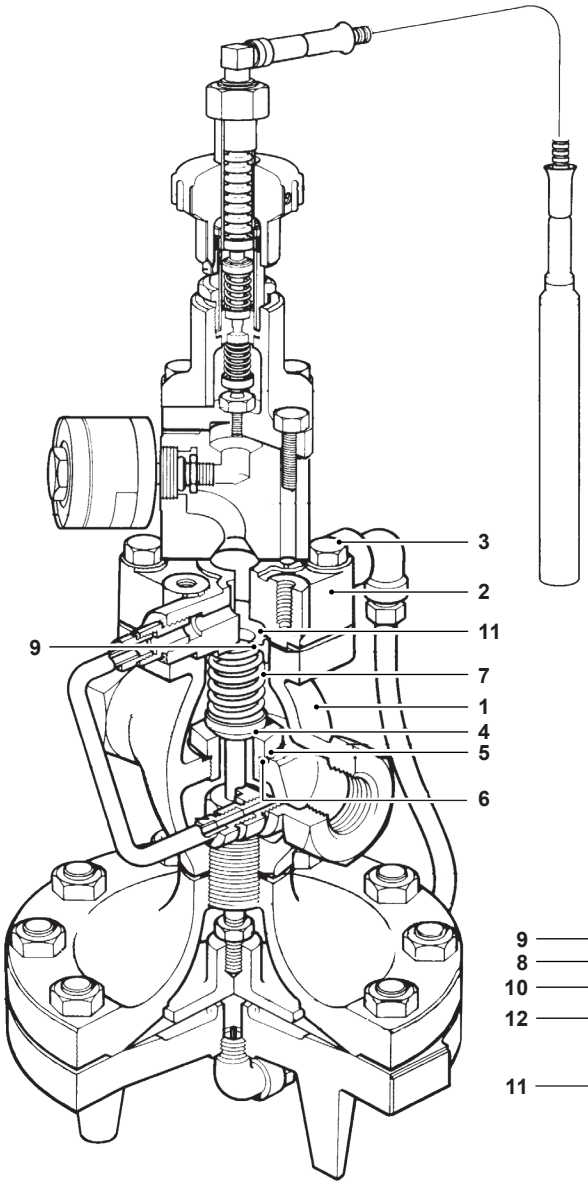

No.	Part	Material	
1	Valve Body	Cast iron	ASTM A 126 CL B
2	Cover	Cast iron	ASTM A 126 CL B
3	Cover Bolts	Steel	ASTM A449
4	Main Valve Head	Stainless steel	
5	Main Valve Seat	Stainless steel	
7	Valve Return Spring	Stainless steel	
8	Valve Stem	Stainless steel	
9	Strainer Screen	Stainless steel	
10	Valve Stem Sleeve	Stainless steel	
11	Spring Guide	Cast iron ½" - 2" (DN15 to DN50)	
		CRS 2"* - 4" (DN50 to DN100)	
12	Nut	Steel	

½" to 2"

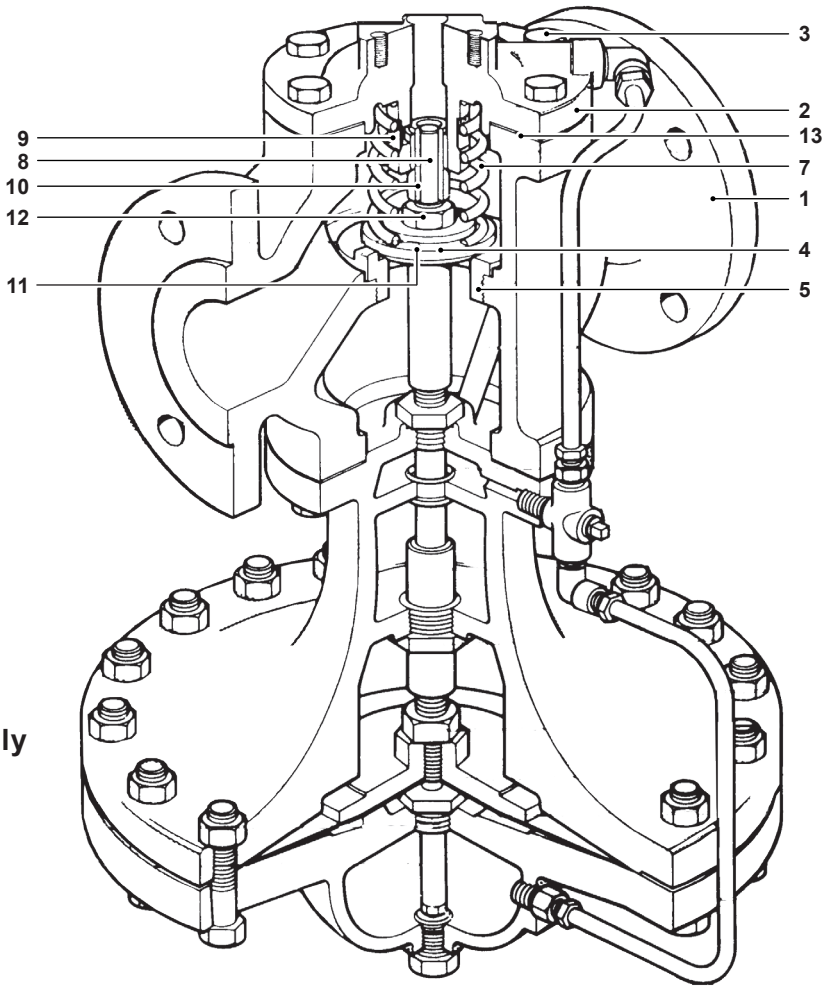

2"* to 4" *ANSI 300 only

Materials continued on next page

Materials (continued)

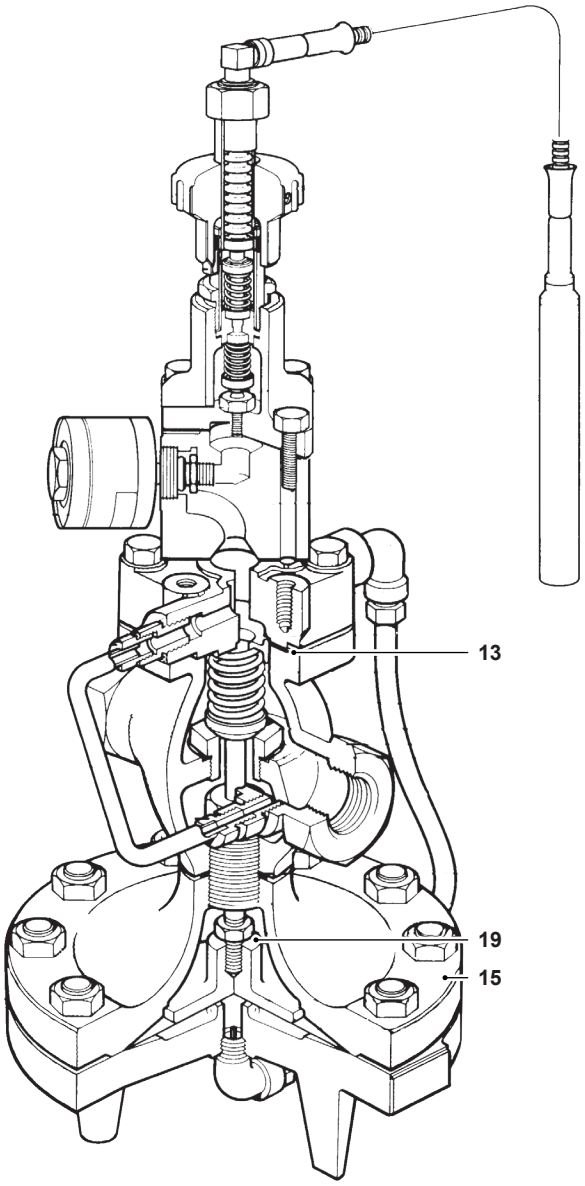

½" to 2"

No.	Part	Material	
13	Cover Gasket	Graphite	
14	Pressure Equalizer Pipe	Stainless steel	
15	Upper Diaphragm Case	Cast iron	ASTM A 126 CL B
		Cast steel	ASTM A216 Gr WCB
16	Stem Bushing	Stainless steel	
		2½" - 4" (DN65 to DN100) Cast steel only	
17	Diaphragm Plate Stem	Stainless steel	
18	Diaphragm Stem Guide	Stainless steel	
19	Nut	Brass ½" - 2" (DN15 to DN50)	
		Steel 2"* - 4" (DN50 to DN100)	
20	Lower Diaphragm Case	Cast iron	ASTM A126CL B
		Cast steel	ASTM A216 Gr WCB

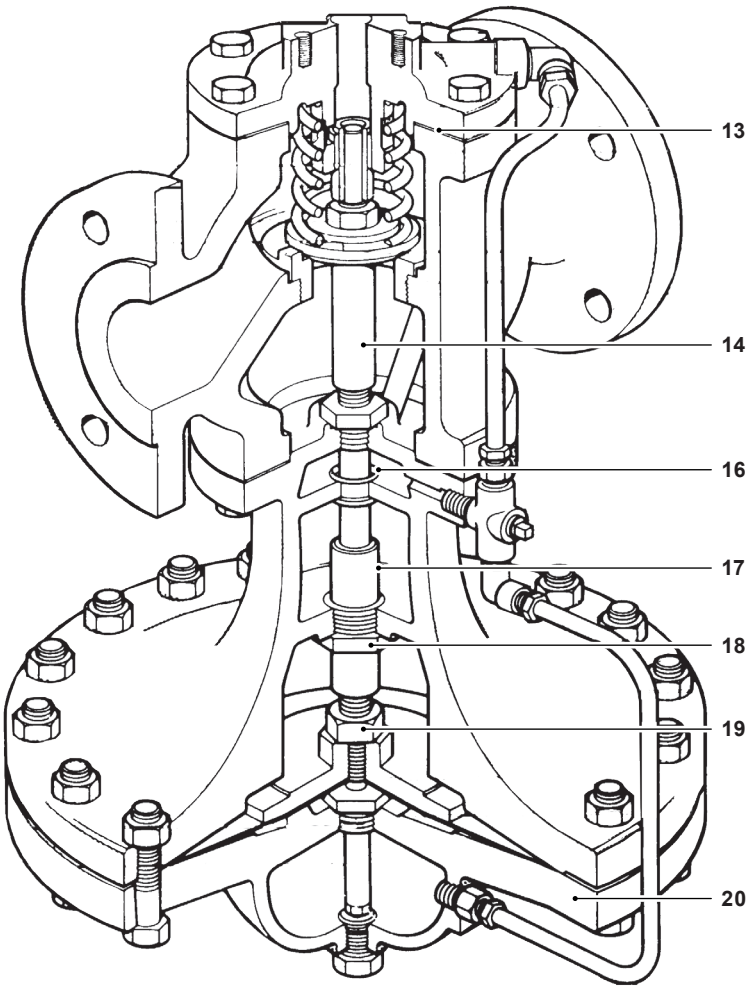

2"* to 4" *ANSI 300 only

Materials continued on next page

Materials (continued)

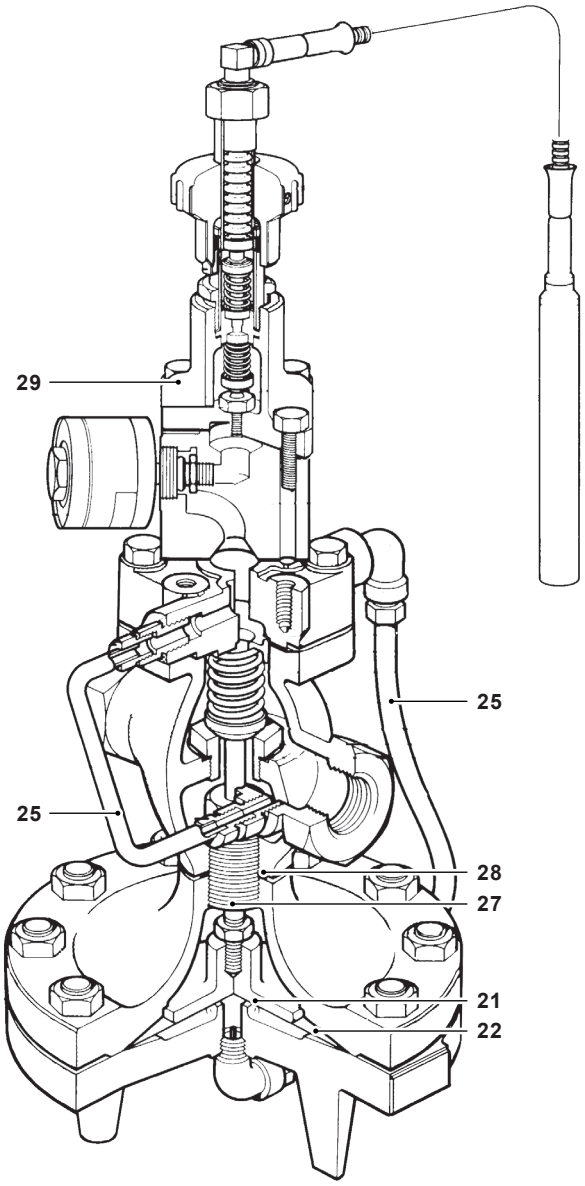

½" to 2"

No.	Part		Material	
21	Diaphragm Plate		Brass ½" - 2" (DN15 to DN50)	
			C.I. 2"* - 4" (DN50 to DN100)	
22	Main Diaphragm (2 ply)		Stainless steel	ASTM A240
23	Bushing		CRS	
24	Tube and Orifice		Stainless steel	
25	Tubing Assembly		Copper	
			Brass	
26	Plug	(Cast iron)	Brass	
		(Cast steel)	Steel	
27	Connector Stud		Stainless steel	
28	Body Gasket		½" - 2" (DN15 to DN50) Copper Clad	
			2"* - 4" (DN50 to DN100) Graphite	
29	Pilot Valve Body		Cast iron	ASTM A 126 CL B
			Cast steel	ASTM A216 Gr WCB

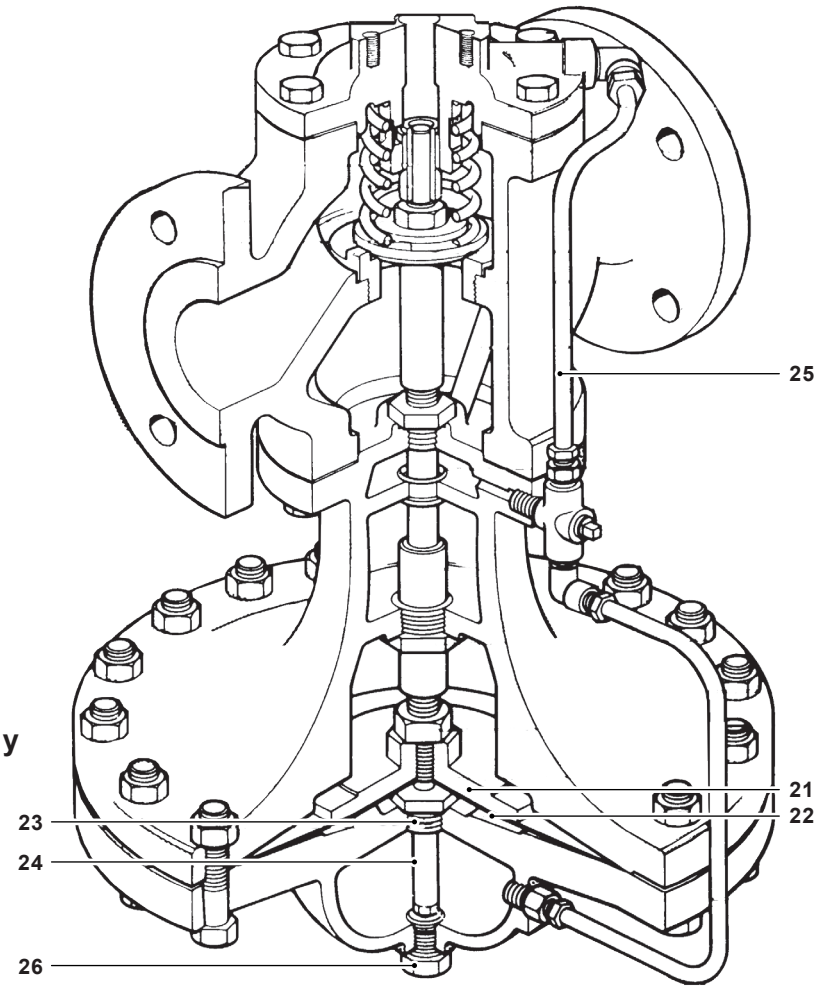

2"* to 4" *ANSI 300 only

Materials continued on next page

Materials (continued)

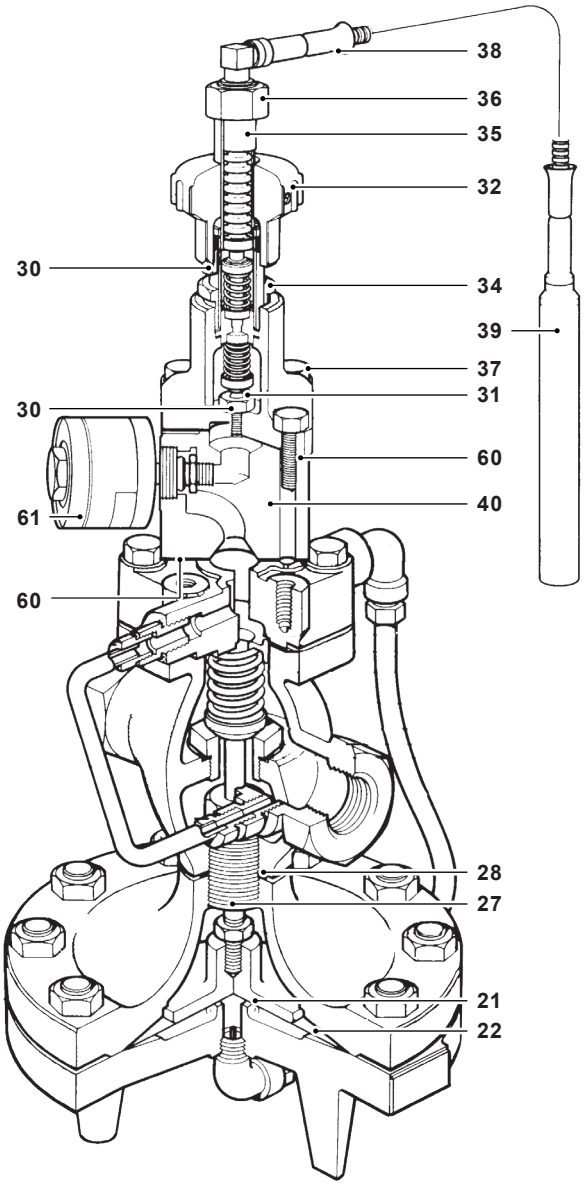

No.	Part	Material
30	Pilot Valve Seat	Stainless steel
31	Pilot Valve Head	Stainless steel
32	Adjustment Knob	Phenolic
33	Pointer	Stainless steel
34	Extension Nut	Brass
35	Case Tube	Brass
36	Retaining Nut	Brass
37	Pilot Mounting Screws	Steel
38	Capillary Tube	Varies with sytle selected
39	Bulb	Varies with style selected
40	Electric Pilot Body	Cast iron
		Cast Bronze
60	Pilot Gasket	Graphite
61	Electric Solonoid Valve	

½" to 2"

2"* to 4" *ANSI 300 only

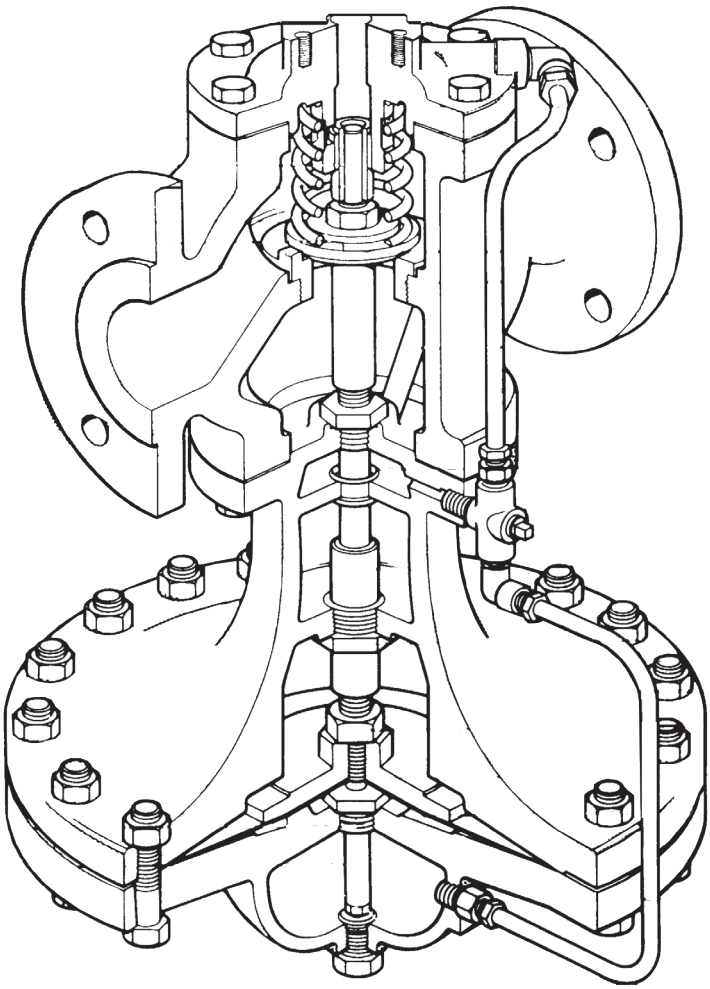

Dimensions/weights (approximate) in inches (*mm*) and lbs (*kg*)

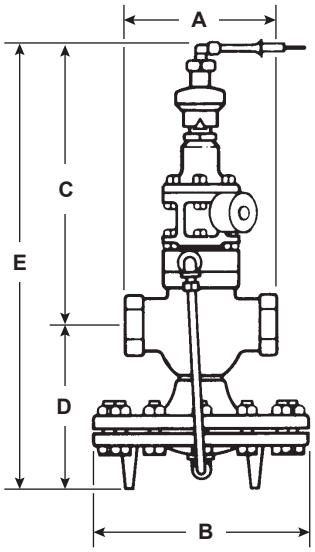

½" to 2"

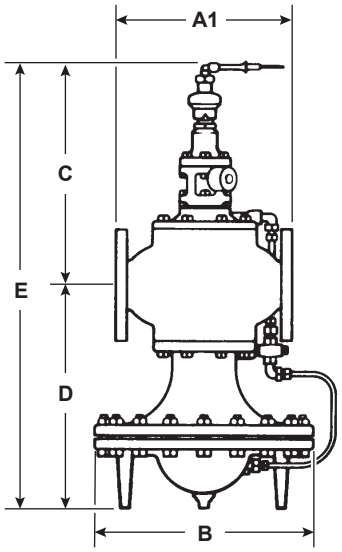

2"* to 4"

Size	A	ANSI 125 ANSI 150 A1	ANSI 250 ANSI 300 A1	B	C	D	E	Weight	
								Cast iron	Cast steel
½", ¾"	5.5 (140)			7.6 (193)	12.1 (307)	6.2 (157)	18.25 (464)	30.5 lb (13.8 kg)	33 lb (15 kg)
1"	6.0 (152)			8.6 (218)	12.0 (305)	6.75 (171)	18.75 (476)	37.5 lb (17 kg)	41 lb (18.6 kg)
1¼", 1½"	7.25 (184)			8.6 (218)	12.6 (320)	7.1 (180)	19.6 (498)	43 lb (19.5 kg)	47 lb (21.3 kg)
2"	8.5 (216)		9.0 (229)	10.6 (269)	13.2 (335)	8.2 (208)	21.4 (544)	67.5 lb (30.6 kg)	74 lb (33.6 kg)
2½"		10.9 (277)	11.5 (292)	13.6 (345)	13.9 (353)	13.9 (353)	27.9 (709)	156 lb (70.8 kg)	170 lb (77.1 kg)
3"		11.75 (298)	12.5 (318)	13.6 (345)	13.9 (353)	14.4 (366)	28.4 (721)	187 lb (84.8 kg)	204 lb (92.5 kg)
4"		13.9 (353)	14.5 (368)	15.6 (396)	15.1 (384)	16.1 (409)	31.2 (792)	283 lb (128 kg)	308 lb (140 kg)

Capacities

The valve is sized according to the temperature control requirements. For selection and sizing data, see TI-P235-18-US.

Sample specification

The pressure reducing valves shall be of the pilot-actuated diaphragm operated type with electric override. The main valve shall be single-seated with hardened stainless steel trim; the valve body shall be cast iron (cast steel). The pilots shall be bolted directly to the valve body and shall be removable without disturbing the control connections The temperature setting shall be adjustable without the use of tools, and the set point shall be indicated on a calibrated dial. The thermostatic system shall be solid-fill, and shall incorporate over heat protection. The electric pilot shall have a NEMA 2, 3, 3S, 4, & 4X enclosure with 120 VAC / 60 Hz coil.

Installation

The regulator should be installed in a horizontal line with suitable bypass and isolating valves. A steam trap should be installed upstream to prevent condensate from reaching the valve. The trap and regulator should both be protected with a strainer. The thermostatic bulb must be carefully located in the medium being heated. Complete installation instructions are given in IM-3-017-US.

Maintenance

Complete installation and maintenance instructions are given in IM-3-017-US, a copy of which is supplied with each valve. Available spare parts are shown on TI-P717-09-US and TI-P235-02-US.