Local regulations may restrict the use of this product to below the conditions quoted.
In the interests of development and improvement of the product, we reserve the right to change the specification without notice. © Copyright 2025

Combination Pressure/Temperature Regulator 6" 25PT

Description

The 25PT eliminates the need for a separate pressure regulator and a temperature regulator. Normal operation is controlled by the temperature pilot, and the pressure pilot sets an upper limit on the downstream steam pressure. The temperature pilot has a calibrated dial for accurate temperature setting, and is available with a variety of solid-fill sensing bulbs (See TI-P235-07-US). Standard capillary tubing lengths are 8ft (2.4 m) and 15ft (4.6 m). This valve meets Class IV shut-off specifications but is not suitable for dead-end service.

Model	**25PT**	
Sizes	6" (DN150)	
Connections	ANSI 125, 250	ANSI 150, 300
Construction	Cast iron	Cast steel
Options	Reduced Orifice Designated by "S" Non-standard capillary tubing length in 5 ft (1.5 m). intervals to a maximum of 50 ft (15.2 m). (See TI-P235-07-US)	

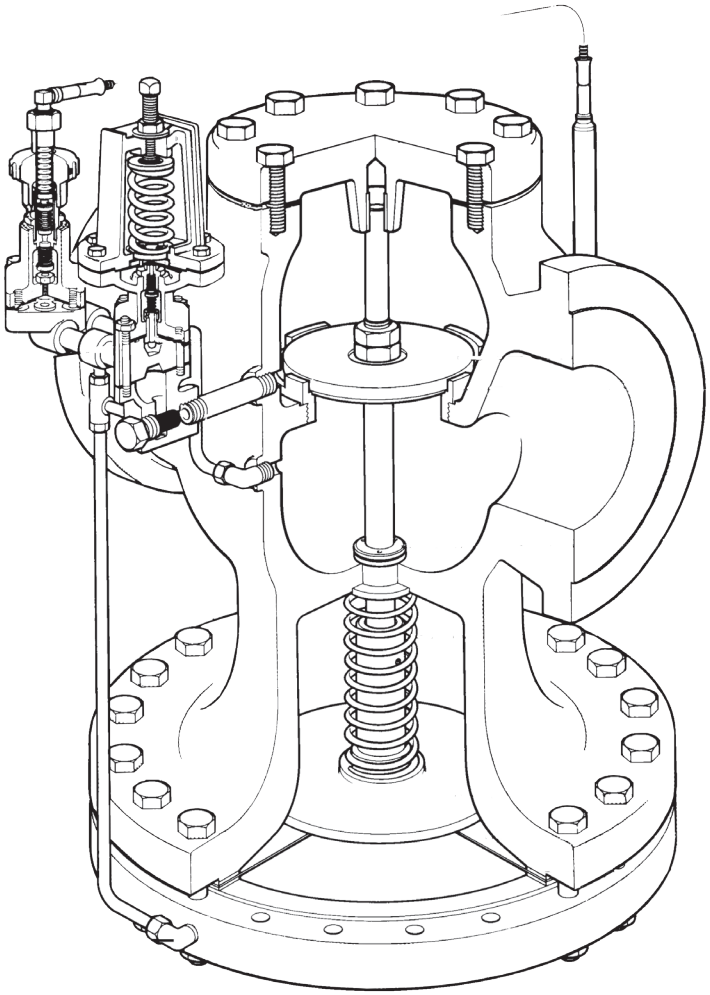

Typical applications

Storage steam water heaters, instantaneous heat exchangers and converters, air handling coils, tank heating coils, steam jacketed vessels, steam chests, molds and platens, and other temperature control applications where it is necessary or desirable to set an upper limit on the delivered steam pressure.

Pressure/temperature limits

Cast iron

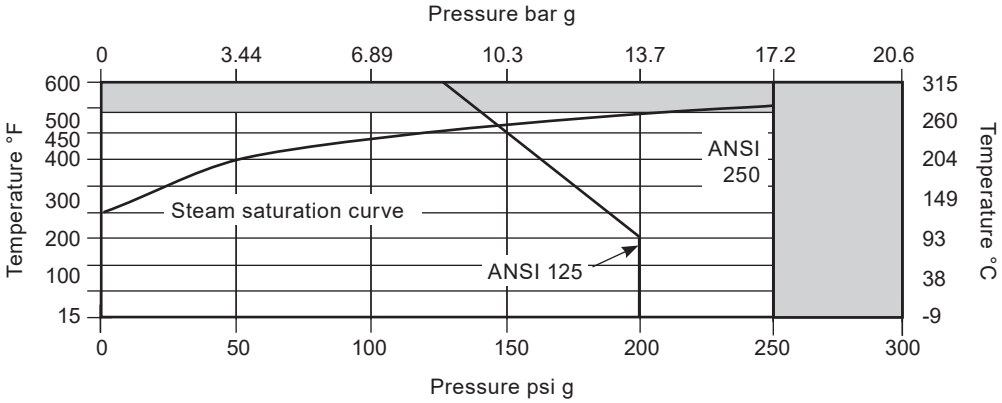

Cast steel

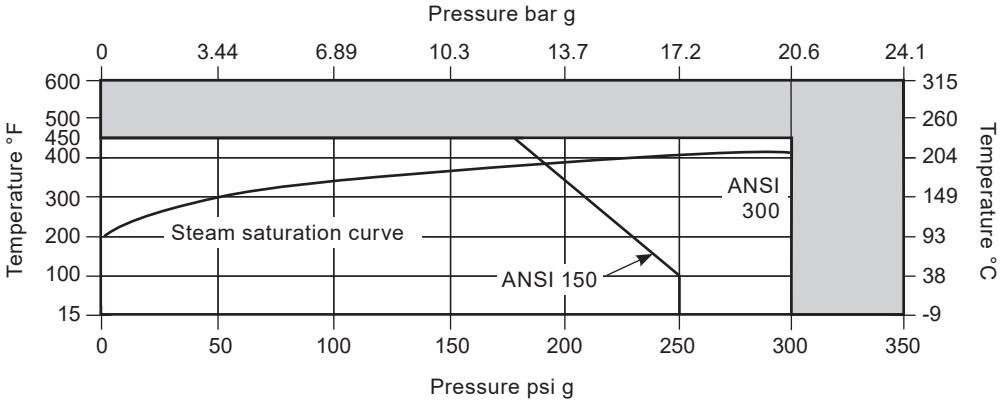

The product **must not** be used in this region.

*The temperature of the sensing bulb must not exceed 350 °F (177 °C)

Downstream pressure ranges

For the following downstream pressures, 3 color-coded pilot valve springs are available:

Yellow	**Blue**	**Red**
3 to 30 psi	20 to 100 psi	80 to 250 psi

Cv Values

Size	6"	6" "S"
Cv value	280	156

Standard temperature ranges

30 °F to 90 °F	*0 °C to 32 °C*
60 °F to 120 °F	*15 °C to 50 °C*
100 °F to 160 °F	*40 °C to 70 °C*
120 °F to 180 °F	*50 °C to 80 °C*
160 °F to 220 °F	*70 °C to 105 °C*
200 °F to 260 °F	*95 °C to 125 °C*
260 °F to 320 °F	*125 °C to 160 °C*

Materials

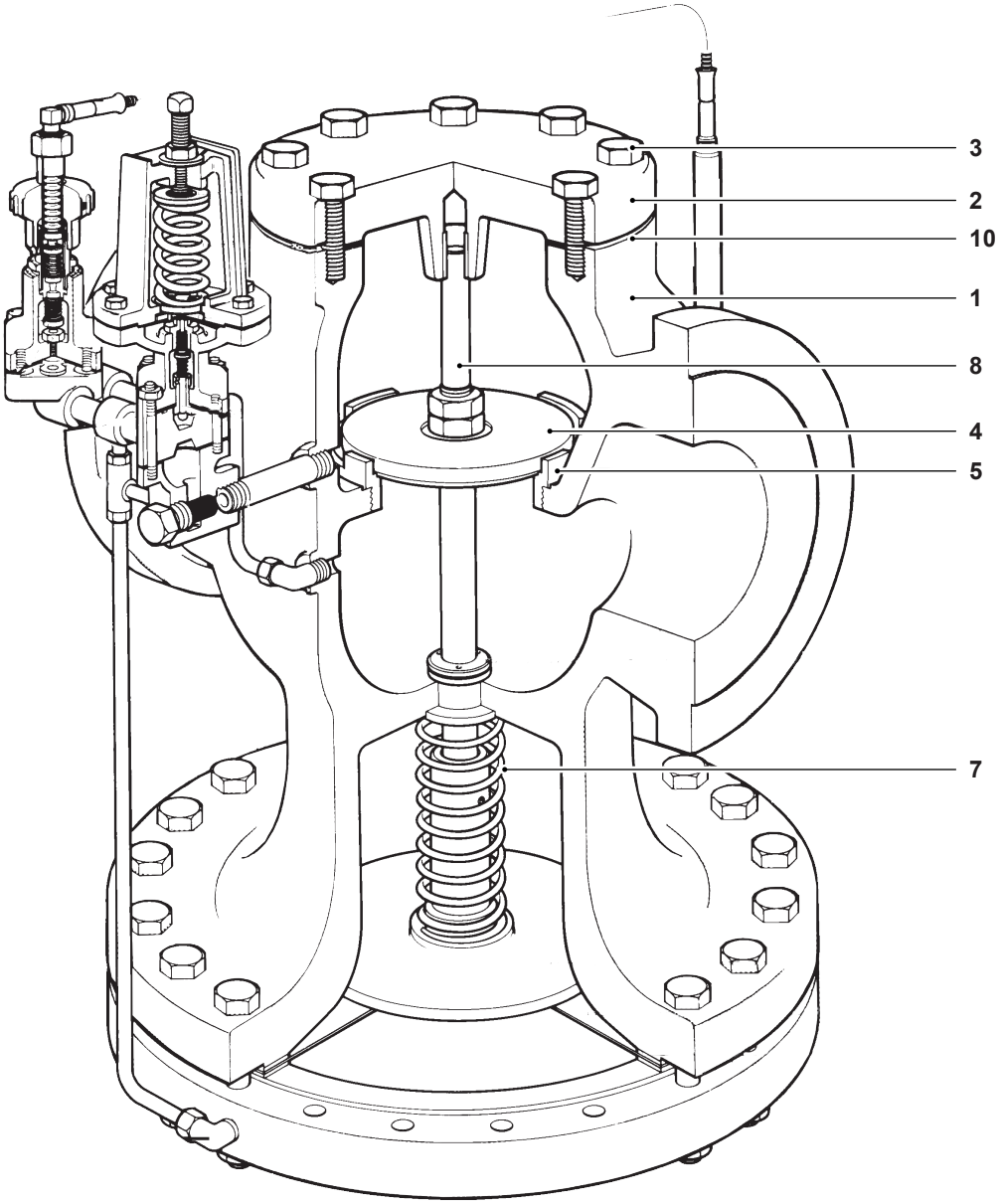

No.	Part	Material	
1	Valve Body	Cast iron	ASTM A 126 CL B
		Cast steel	ASTM A 216 WC B
2	Cover	Cast iron	ASTM A 126 CL B
		Cast steel	ASTM A 216 WC B
3	Cover Bolts	Steel	AISI 1038
4	Main Valve Head	Stainless steel	ASTM A 743 CA 40
5	Main Valve Seat	Stainless steel	ASTM A 743 CA 40
7	Valve Return Spring	Stainless steel	AISI 302
8	Valve Stem	Stainless steel	AISI 304
10	Cover Gasket	Graphite	BS 2815A

Materials continued on next page

Materials (continued)

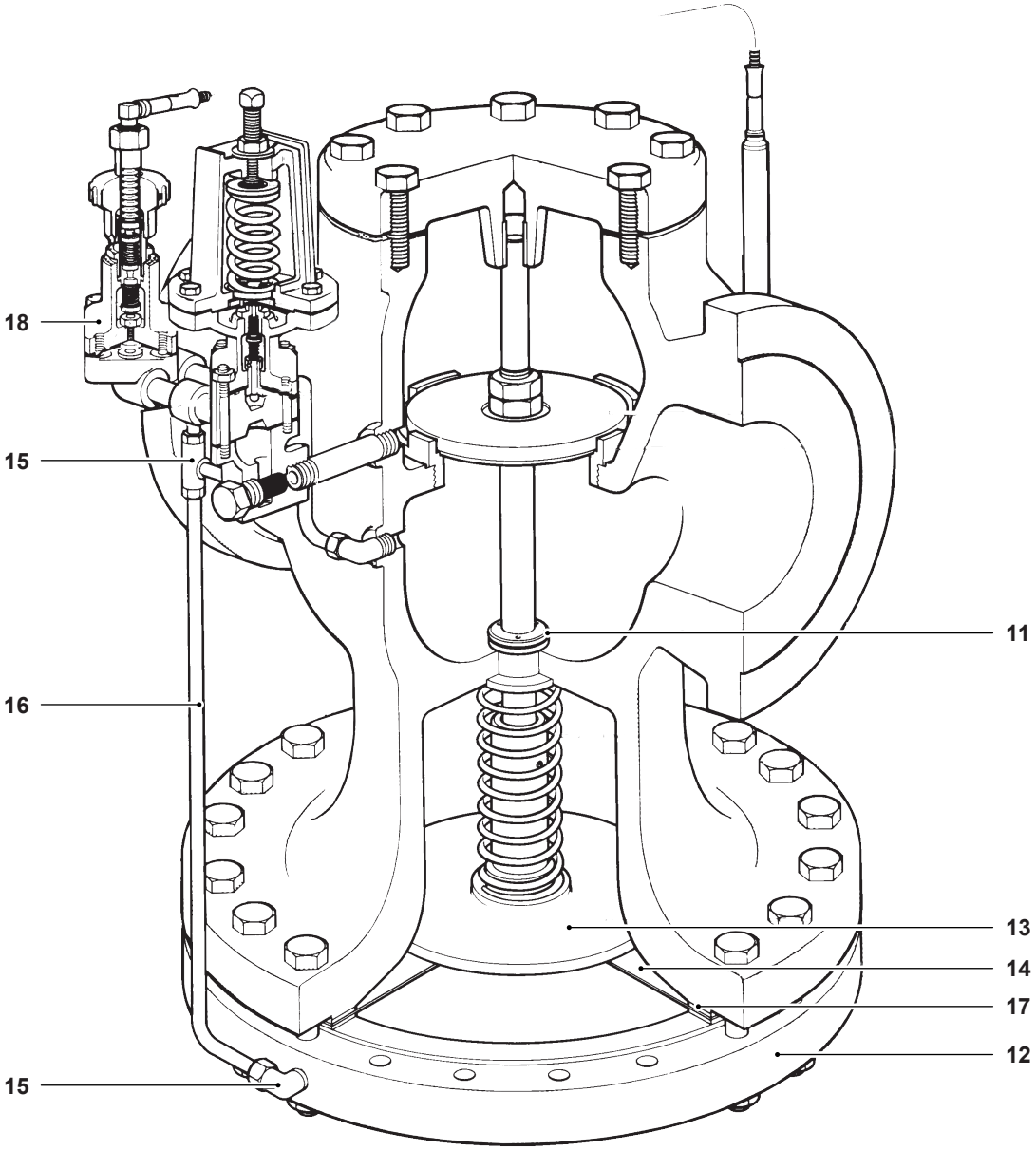

No.	Part	Material	
11	Stem Bushing	Brass	ASTM B16
12	Lower Diaphragm Case	Cast iron	ASTM A 126 CL B
		Cast steel	ASTM A 216 WC B
13	Diaphragm Plate	Stainless steel	ASTM A 743 CA 40
14	Main Diaphragm (2 ply)	Stainless steel	ASTM A240
15	Tube & Orifice	Brass	ASTM B16
16	Tubing Assembly	Copper	ASTM B280 (122)
17	Diaphragm Gasket (2)	Graphite	BS 2815 A
18	Pilot Valve Body	Cast iron	ASTM A 126 CL B
		Cast steel	ASTM A 216 WC B

Materials continued on next page

Materials (continued)

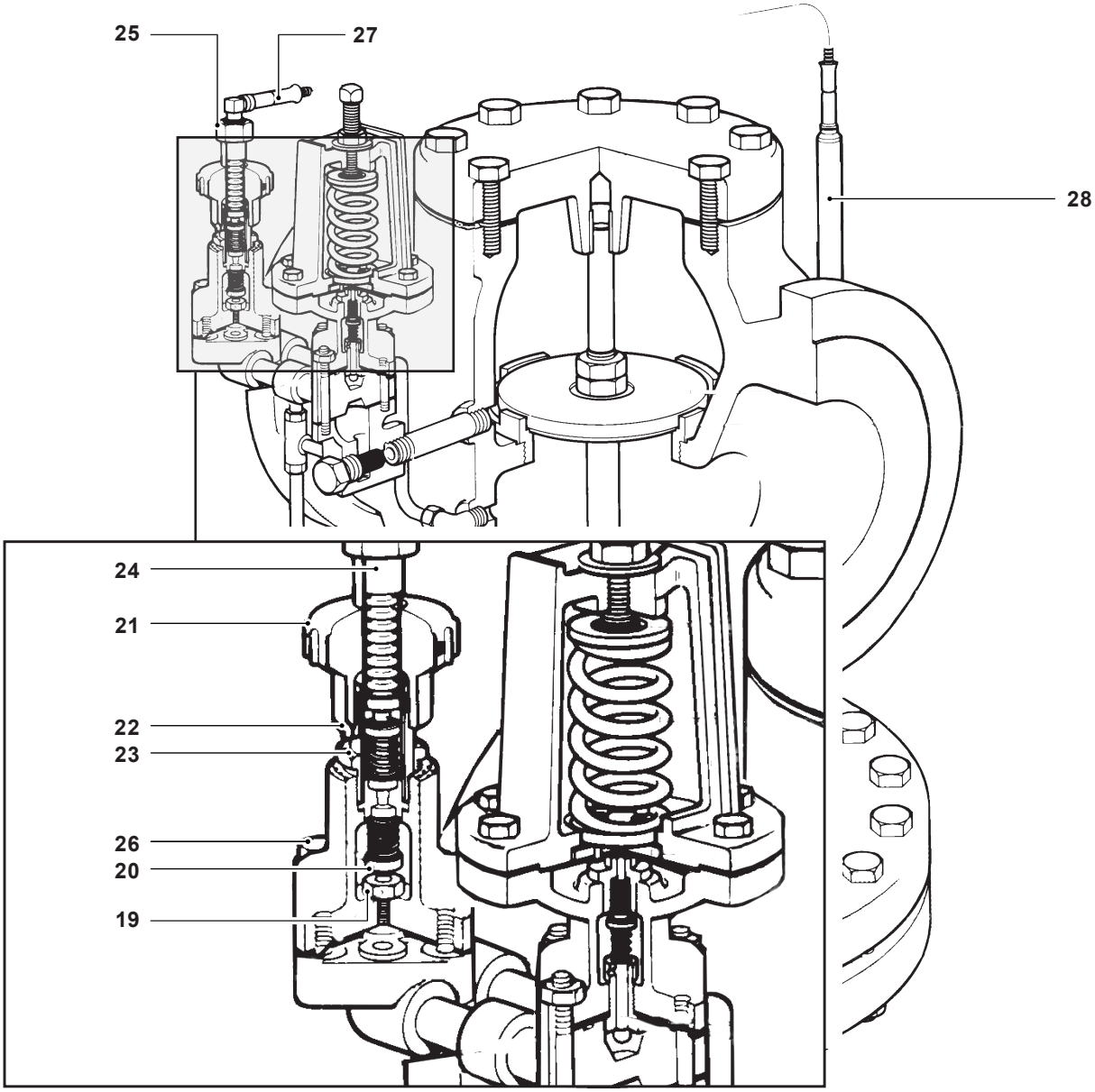

No.	Part	Material	
19	Pilot Valve Seat	Stainless steel	AISI 303
20	Pilot Valve Head	Stainless steel	AISI 440A
21	Adjustment Knob	Phenolic	ASTM D 700 Ty2
22	Pointer	Stainless steel	AISI 301
23	Extension Nut	Brass	ASTM B16
24	Case Tube	Brass	ASTM B 135 (330)
25	Retaining Nut	Brass	ASTM B 16
26	Pilot Mounting Screws	Steel	ASTM A449
27	Capillary Tube	Varies with style selected	
28	Bulb	Varies with style selected	

Materials continued on next page

Materials (continued)

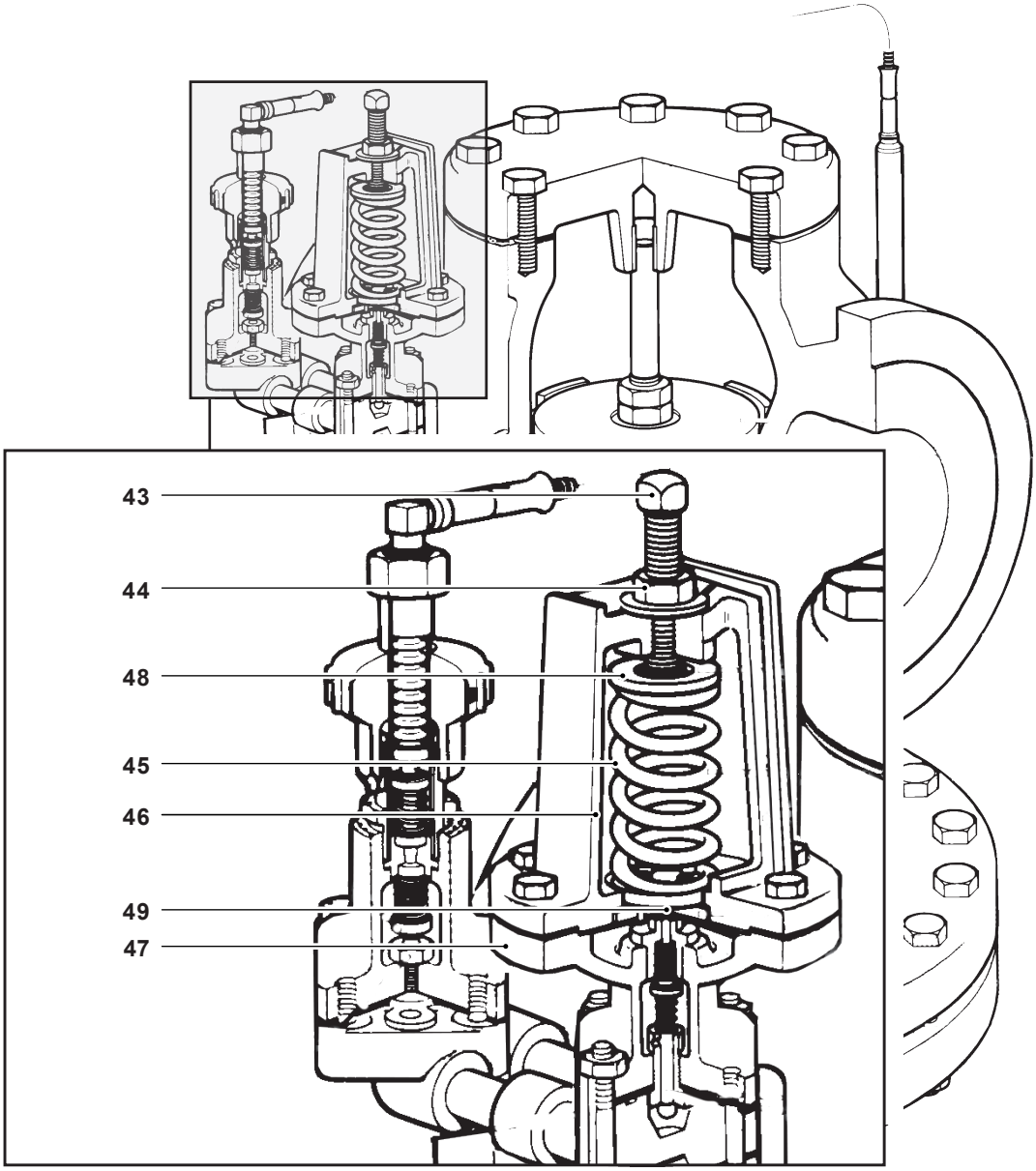

No.	Part	Material	
43	Adjustment Screw	Stainless steel	AISI 304
44	Jam Nut	Brass	ASTM B16
45	Pilot Valve Spring	Steel	AISI 1060
46	Upper Diaphragm Case	Cast iron	ASTM A 126 CL B
		Cast steel	ASTM A 216 WC B
47	Lower Diaphragm Case	Cast iron	ASTM A 126 CL B
		Cast steel	ASTM A 216 WC B
48	Spring Plate	Steel	ASTM A569
49	Diaphragm	Stainless steel	ASTM A240

Materials continued on next page

Materials (continued)

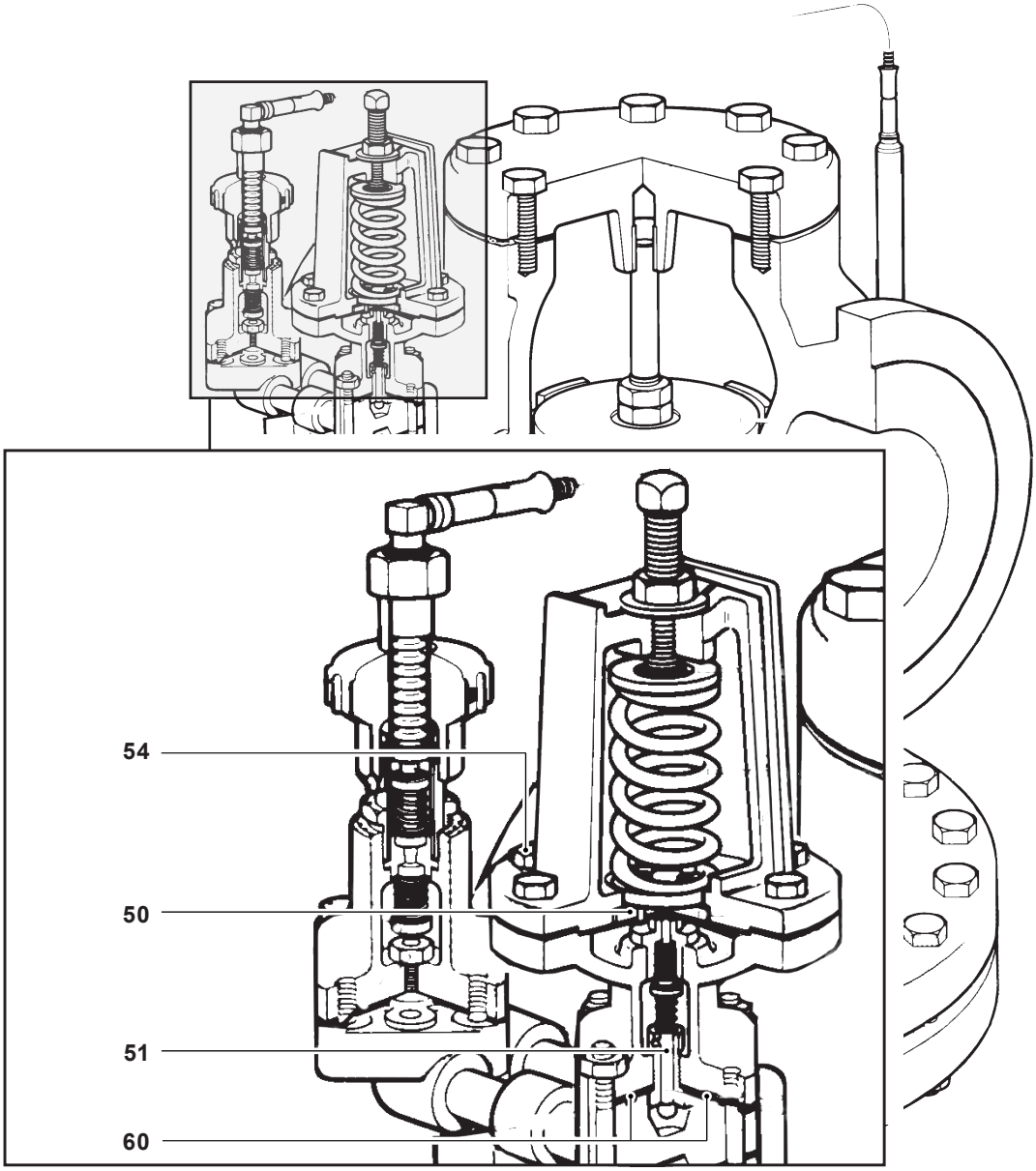

No.	Part	Material	
50	Diaphragm Plate	Brass	ASTM B36
51	Head & Seat Assembly	Stainless steel	AISI 440
		Stainless steel	AISI 440F
54	Diaphragm Case Screws	Steel 5⁄16" - 18 x 1"	ASTM A449
60	Pilot Gasket	Graphite	

Dimensions/weights (approximate) in inches (mm) and lbs (kg)

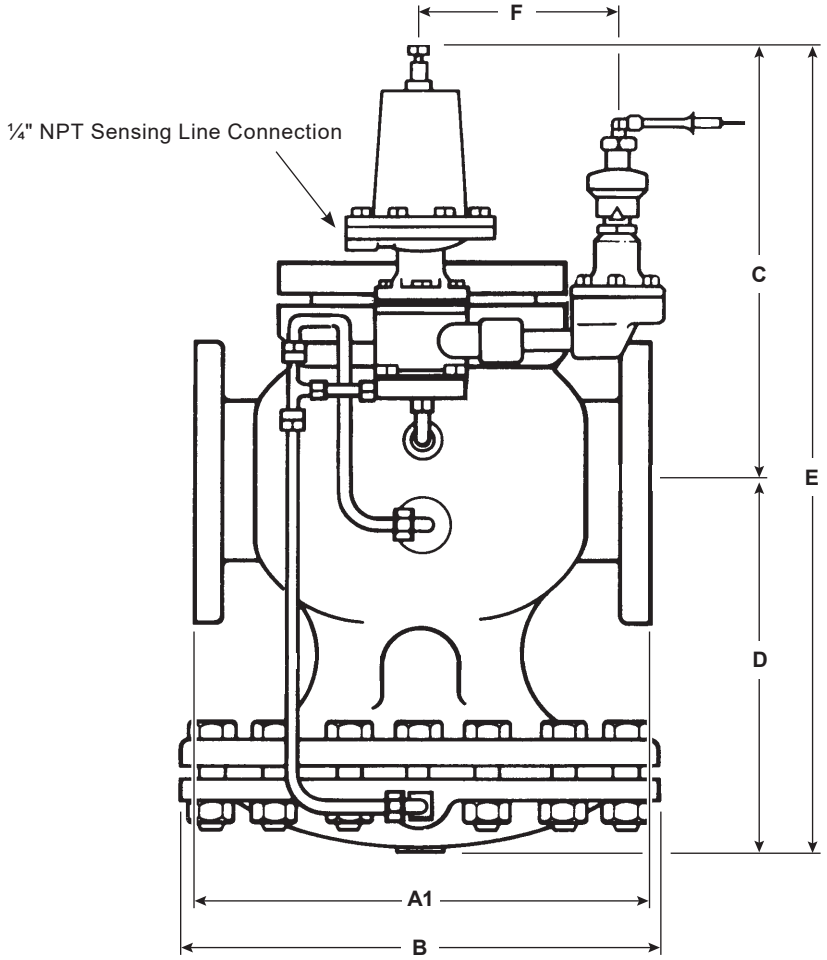

Size	ANSI 125/150 A1	ANSI 250/300 A1	B	C	D	E	F	Weight
6"	18.1 (460)	18.9 (481)	19.75 (502)	16.1 (408)	17.1 (435)	33.2 (843)	5.0 (127)	595 (270)

Sample specification

Pressure/Temperature Regulators shall be of the pilot-actuated, diaphragm-operated type with separate pressure and temperature pilots. The main valve shall be single-seated, with hardened stainless steel trim; the regulator body shall be cast iron. The pilots shall be removable without disturbing the control connections. The temperature setting shall be adjustable without the use of tools, and the set point shall be indicated on a calibrated dial. The thermostatic system shall be solid fill, and shall incorporate overheat protection.

Installation

The regulator should be installed in a horizontal line with suitable bypass and isolating valves. A steam trap should be installed upstream to prevent condensate from reaching the regulator. The trap and regulator should both be protected with a strainer separator set. The thermostatic bulb must be carefully located in the medium being heated. The pressure sensing line may be located either in the downstream or in the steam space. Complete installation instructions are given in IM-P717-05-US.

Maintenance

Complete installation and maintenance instructions are given in IM-P717-05-US and ADVP 3029, a copy of which is supplied with each regulator. Available spare parts are shown on TI-P335-11 and TI-P235-02.