Local regulations may restrict the use of this product to below the conditions quoted.
In the interests of development and improvement of the product, we reserve the right to change the specification without notice. © Copyright 2025

Electric Pilot Operated On/Off Regulator 6" 25E

Description

The 25E is controlled by an electric pilot valve. The main valve opens wide when the pilot is energized; it closes when the pilot is de-energized. The 25E does not modulate or throttle steam at part load.
This valve meets Class IV shut-off specifications but is not suitable for dead-end service.

Model	**25E**	
Sizes	6" (DN150)	
Connections	ANSI 125, 250	ANSI 150, 300
Construction	Cast iron	Cast steel
Options	Reduced Orifice Designated by "S"	
Electric pilot specifications	Enclosure: NEMA 2, 3, 3S, 4, & 4X 120 VAC / 60 Hz Holding: 23 VAC Inrush: 45 VAC Normally Closed PMO: 200 psi g (13.8 bar g) TMO: 388 °F (198 °C)	
Electric pilot options	240 VAC / 60Hz 24 VAC / 60 Hz For faster response time PMO: 140 psi g (9.7 bar g) TMO: 361 °F (183 °C)	

Typical applications

On/Off control of steam flow in response to remote manual or automatic electrical signals which may originate at safety switches, timers, manual switches, etc.

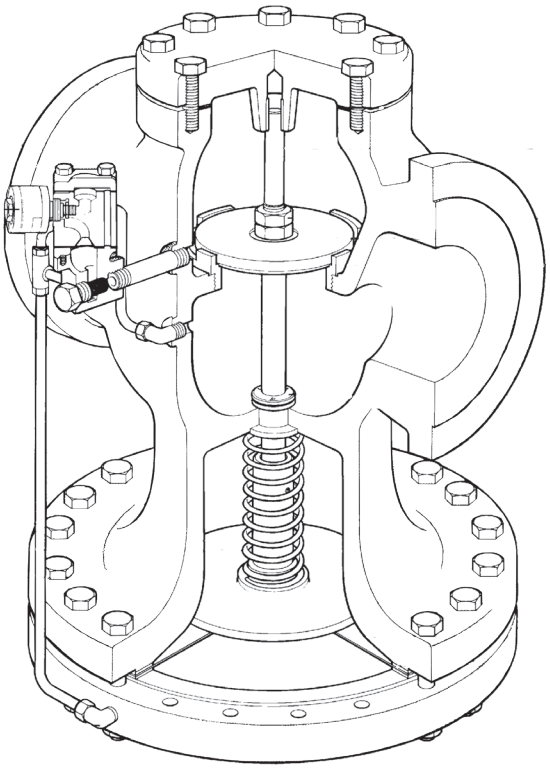

Limiting operating conditions

Cast iron

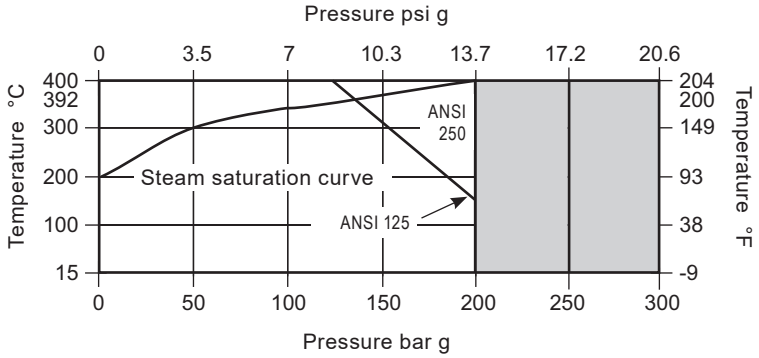

Cast steel

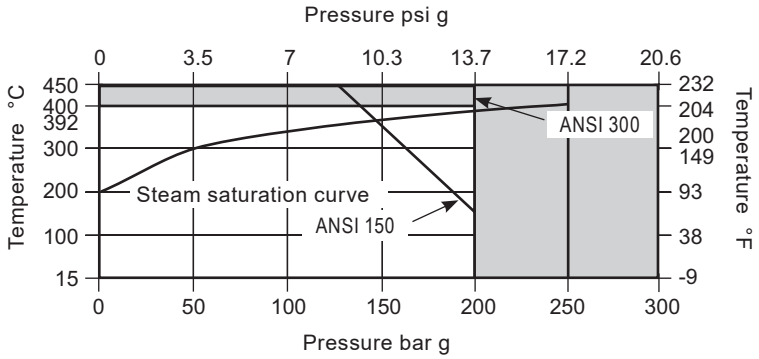

The product **should not** be used in this region.

*The temperature of the sensing bulb must not exceed 350 °F (177 °C)

Cv Values

Size	6"	6" "S"
Cv value	280	156

Materials

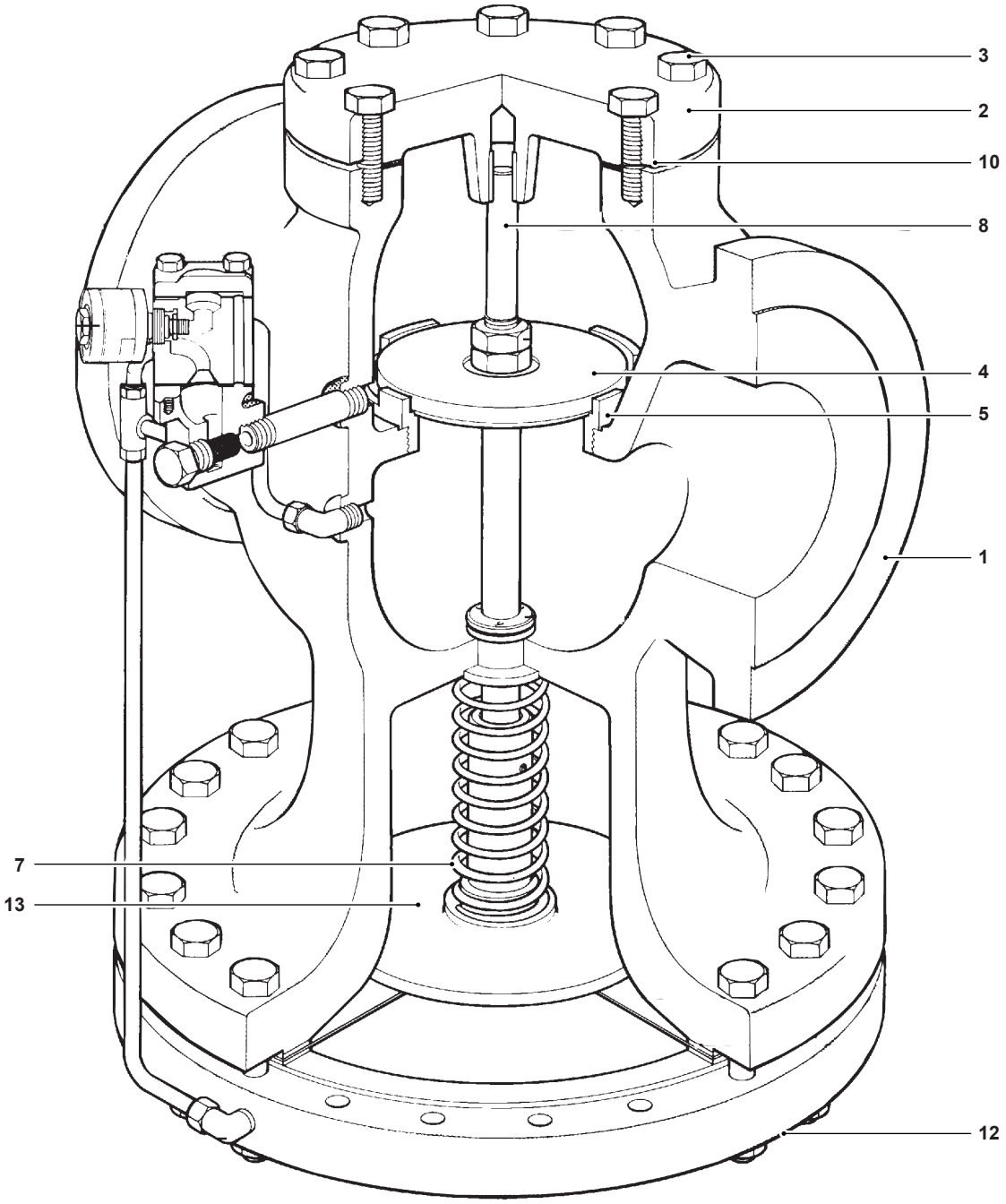

No.	Part	Material	
1	Valve Body	Cast iron	ASTM A 126 CL B
		Cast steel	ASTM A 216 WC B
2	Cover	Cast iron	ASTM A 126 CL B
		Cast steel	ASTM A 216 WC B
3	Cover Bolts	Steel	AISI 1038
4	Main Valve Head	Stainless steel	ASTM A 743 CA 40
5	Main Valve Seat	Stainless steel	ASTM A 743 CA 40

No.	Part	Material	
7	Valve Return Spring	Stainless steel	AISI 302
8	Valve Stem	Stainless steel	AISI 304
10	Cover Gasket	Graphite	BS 2815 A
12	Lower diaphragm case	Cast iron	ASTM A 126 CL B
		Cast steel	ASTM A 216 WC B
13	Diaphragm Plate	Stainless steel	ASTM A 743 CA 40

Materials continued on next page

Materials (continued)

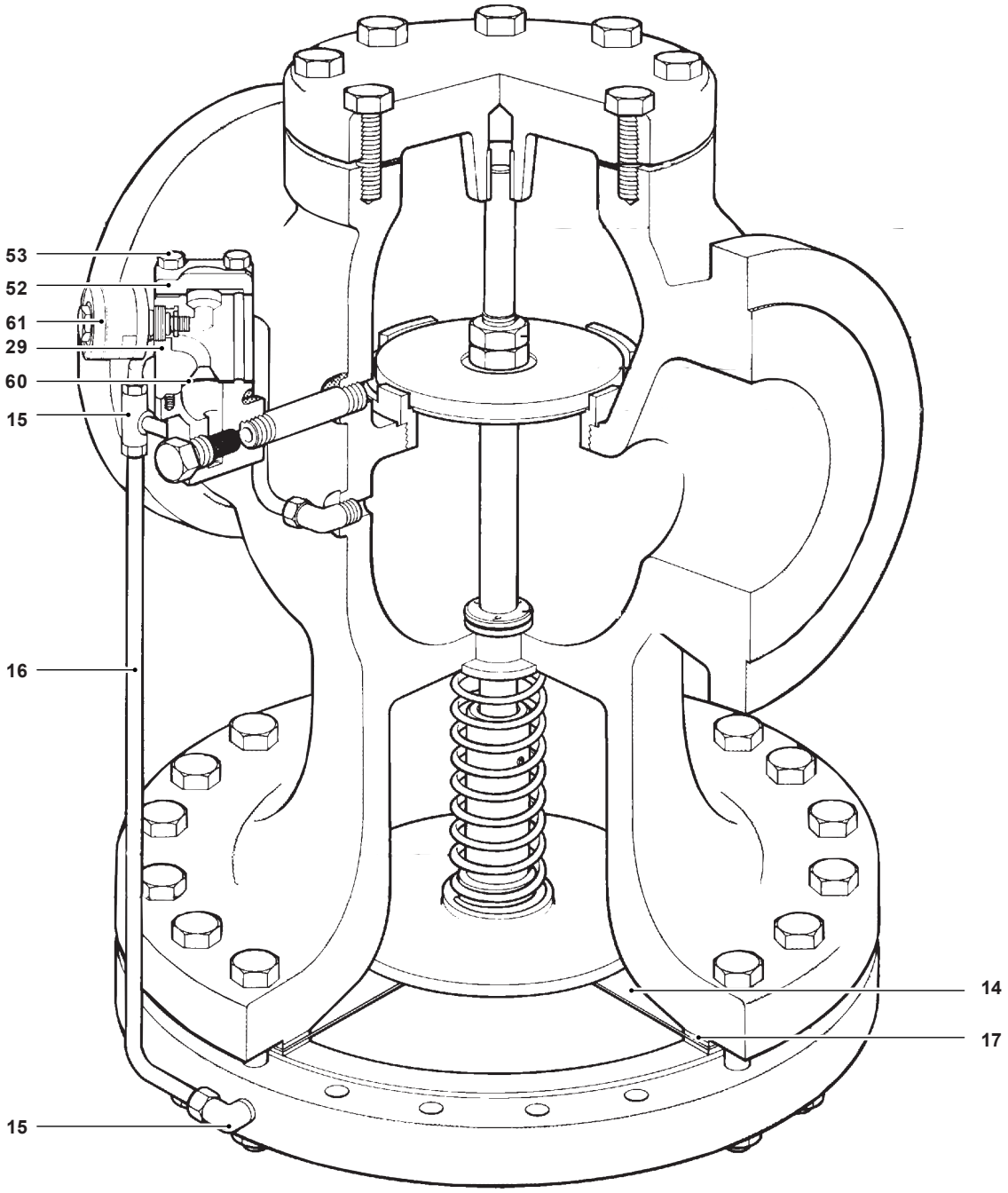

No.	Part	Material	
14	Main diaphragm (2 ply)	Stainless steel	ASTM A240
15	Orifice	Brass	ASTM B16
16	Tubing Assembly	Copper	ASTM B280 (122)
17	Diaphragm Gasket	Graphite	BS 2815 A

No.	Part	Material	
29	Electric Pilot Adaptor	Cast iron	ASTM A126 CL B
52	Electric Pilot Cover	Cast iron	ASTM A 126 CL B
53	Cap Screws	Steel	ASTM A449
60	Pilot Gasket	Graphite	
61	Electric Solenoid Valve		

Dimensions/weights (approximate) in inches (mm) and lbs (kg)

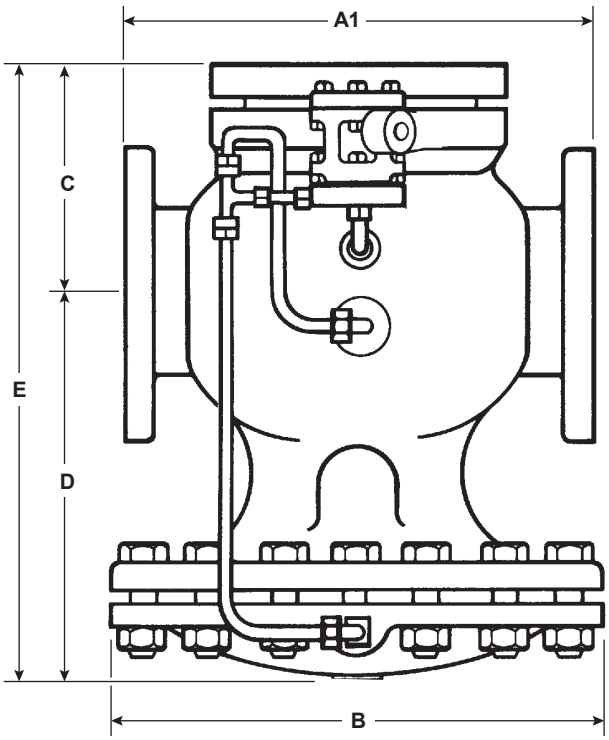

Size	ANSI 125/150 A1	ANSI 250/300 A1	B	C	D	E	Weight
6"	18.1 (460)	18.9 (480)	19.75 (502)	8.9 (226)	17.1 (434)	26.1 (663)	595 lb (270 kg)

Capacities

The valve is sized according to the temperature control requirements. For selection and sizing, see TI-P235-18-US.

Sample specification

The On/Off operation of the main valve shall be controlled by an electric solenoid pilot which may be removed without disturbing the control tubing connections. The main valve shall be single-seated, with hardened stainless steel trim; the valve body shall be Cast iron. The electric pilot shall have a NEMA 2, 3, 3S, 4, & 4X enclosure with 120 VAC / 60 Hz coil.

Installation

The valve should be installed in a horizontal pipe with suitable by-pass and isolating valves. A steam trap must be installed upstream to prevent condensate from reaching the valve. The trap and valve should both be protected with a strainer separator set.

Maintenance

Complete installation and maintenance instructions are given in
IM-P717-02-US and ADVP 3029, a copy of which is supplied with each valve. Available spare parts are shown on TI-P235-02-US and TI-P335-11-US.