Local regulations may restrict the use of this product to below the conditions quoted.
In the interests of development and improvement of the product, we reserve the right to change the specification without notice. © Copyright 2026

Electric Pilot Operated On/Off Regulator ½" to 4" 25E

Description

The 25E is controlled by an electric pilot valve. The main valve opens wide when the pilot is energized; it closes tight when the pilot is de-energized. The 25E does not modulate or throttle steam at part load.

Note: For pressures below 15 psi g, the E pilot is not recommended for use with valves 2½" (DN65) and larger.

Model	**25E**			
Sizes	½" to 2" (DN15 to DN50)	2½", 3", 4" (DN65, DN80, DN100)	½" to 2" (DN15 to DN50)	2", 2½", 3", 4" (DN50, DN65, DN80, DN100)
Connections	NPT	ANSI 125	NPT	ANSI 300
Construction	Cast Iron		Cast Steel	
Options		ANSI 250		ANSI 150 (excludes 2")
Transmission tubing	Copper Tubing		Stainless Steel Tubing	
Electric pilot specifications	Enclosure: NEMA 2, 3, 3S, 4, and 4X 120 VAC / 60 Hz Holding: 23 VAC Inrush: 45 VAC Normally Closed PMO: 200 psi g (13.8 bar g) TMO: 388 °F (198 °C)			
Electric pilot options	240 VAC / 60Hz 24 VAC / 60 Hz For faster response time PMO: 140 psi g (9.7 bar g) TMO: 361 °F (183 °C)			

½" to 2"

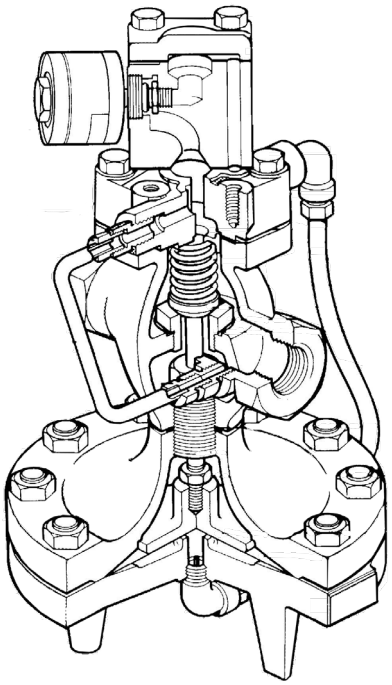

2"* to 4"
***ANSI 300 only**

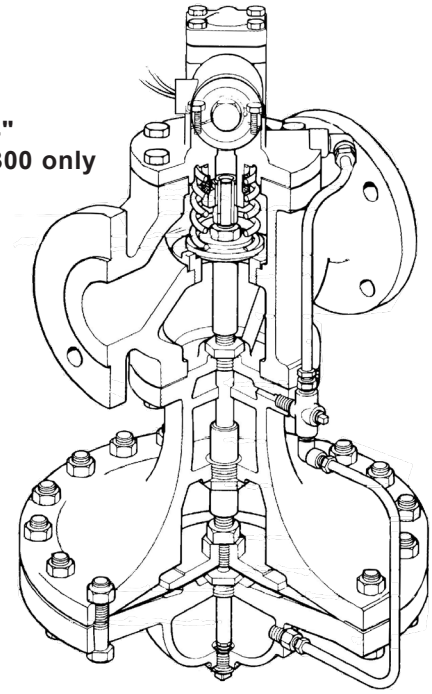

Typical applications

On/Off control of steam flow in response to remote manual or automatic electrical signals which may originate at safety switches, timers, manual switches, etc.

Limiting operating conditions

Maximum operating pressure (PMO)	NPT:	200 psi g @ 392 °F	(14 bar g @ 200 °C)
	ANSI 125:	125 psi g @ 392 °F	(8 bar g @ 200 °C)
	ANSI 250:	200 psi g @ 392 °F	(14 bar g @ 200 °C)
	ANSI 150:	185 psi g @ 392 °F	(12 bar g @ 200 °C)
	ANSI 300:	200 psi g @ 392 °F	(14 bar g @ 200 °C)
Maximum operating temperature (TMO)		392 °F	(200 °C)

Pressure shell design conditions

PMA Maximum allowable pressure	Cast iron:	250 psi g @ 0-450 °F	(17 bar g @ 0-232 °C)
	Cast steel:	300 psi g @ 0-450 °F	(20 bar g @ 0-232 °C)
TMA Maximum allowable temperature	Cast iron:	450 °F @ 0-250 psi g	(232 °C @ 0-17 bar g)
	Cast steel:	450 °F @ 0-300 psi g	(232 °C @ 0- bar g)

Capacities

For selection and sizing data, see TI-P235-18-US.

Materials - ½" to 2"

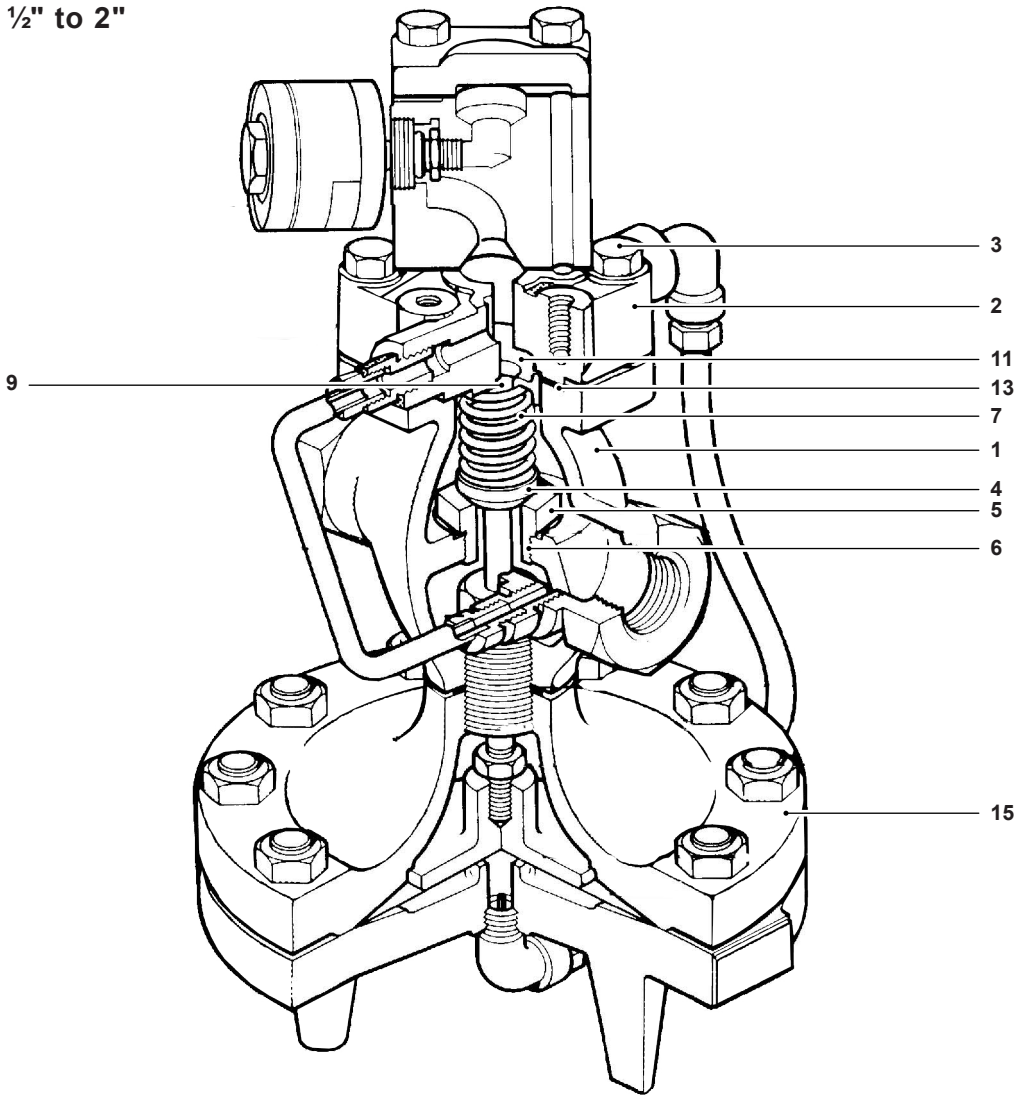

No.	Part	Material	
1	Valve Body	Cast Iron	ASTM A 126 CL B
		Cast Steel	ASTM A216 Gr WCB
2	Cover	Cast Iron	ASTM A 126 CL B
		Cast Steel	ASTM A216 Gr WCB
3	Cover Bolts	Steel	ASTM A449
4	Main Valve Head	Stainless Steel	
5	Main Valve Seat	Stainless Steel	
6	Main Valve Seat Gasket	Copper	
7	Valve Return Spring	Stainless Steel	
9	Strainer Screen	Stainless Steel	
11	Spring Guide	Cast Iron ½"-2"	
		CRS 2"* - 4"	
13	Cover Gasket	Graphite	
15	Upper Diaphragm Case	Cast Iron	ASTM A 126 CL B
		Cast Steel	ASTM A216 Gr WCB

Materials continued on next page

Materials - ½" to 2" (continued)

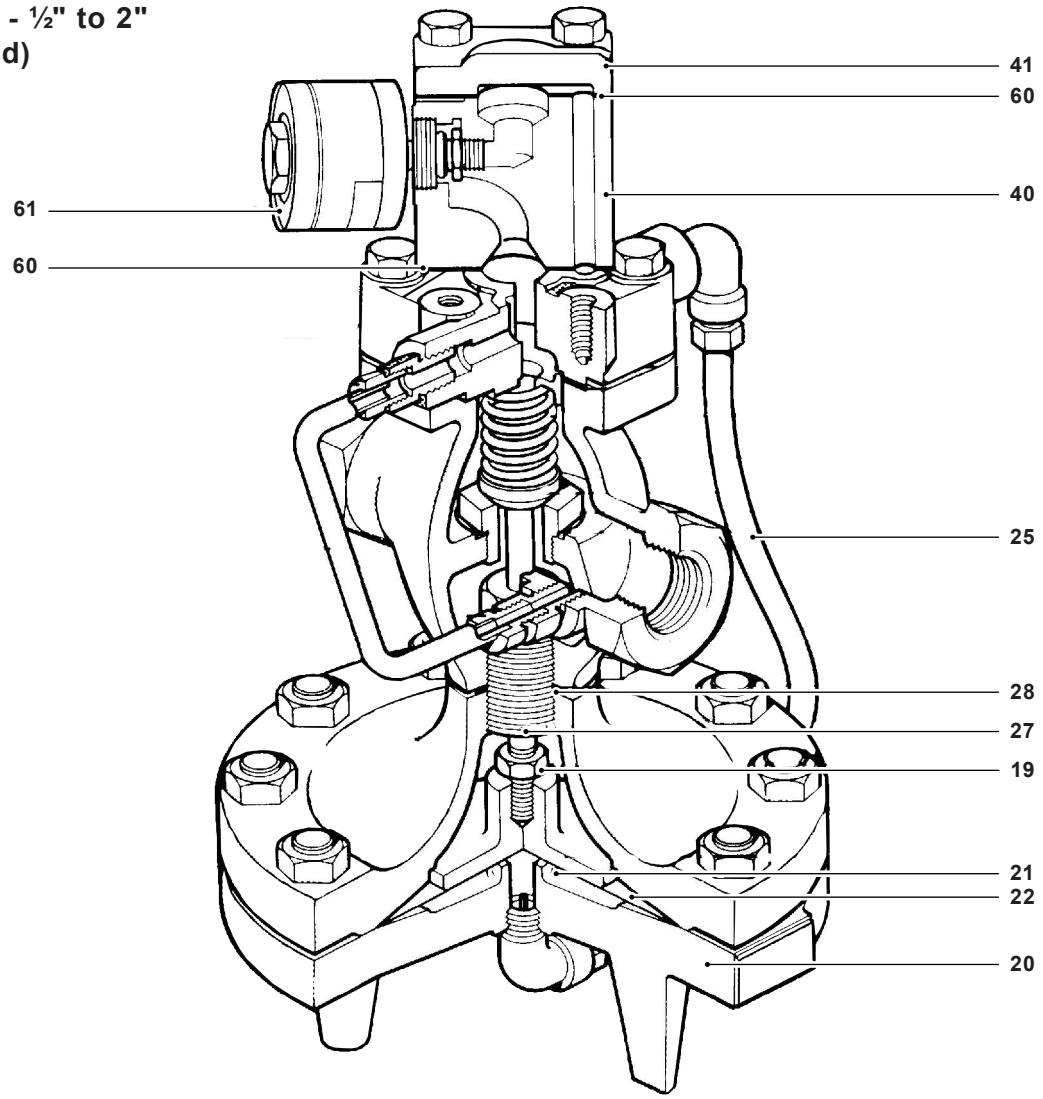

No.	Part	Material	
19	Nut	Brass ½" - 2"	
		Steel 2"* - 4"	
20	Lower Diaphragm Case	Cast Iron	ASTM A 126 CL B
		Cast Steel	ASTM A216 Gr WCB
21	Diaphragm Plate	Brass ½" - 2"	
		C.I. 2"* - 4"	
25	Tubing Assembly Cast Iron	Copper / Brass	
	Tubing Assembly Cast Steel	Stainless Steel	
27	Connector Stud	Stainless Steel	
40	Electric Pilot Body	Cast Iron	ASTM A 126 CL B
		Cast Bronze	ASTM B62
41	Electric Pilot Cover	Cast Iron	ASTM A 126 CL B
42	Cap Screws	Steel	ASTM A449
60	Pilot Gasket	Stainless Steel	
61	Electric Solenoid Valve		

Materials continued on next page

Materials - 2"* to 4"

***ANSI 300 only**

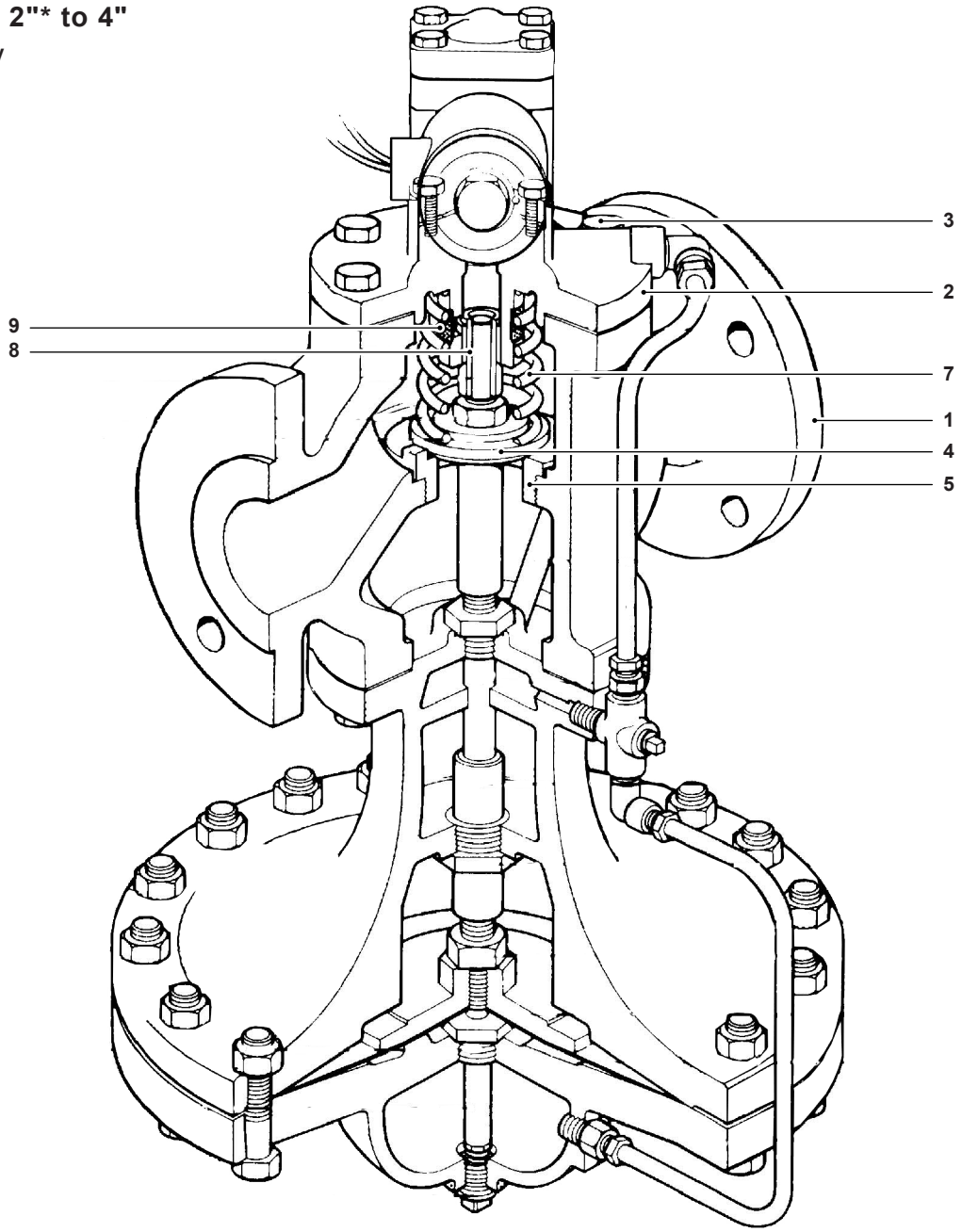

No.	Part	Material	
1	Valve Body	Cast Iron	ASTM A 126 CL B
		Cast Steel	ASTM A216 Gr WCB
2	Cover	Cast Iron	ASTM A 126 CL B
		Cast Steel	ASTM A216 Gr WCB
3	Cover Bolts	Steel	ASTM A449
4	Main Valve Head	Stainless Steel	
5	Main Valve Seat	Stainless Steel	
7	Valve Return Spring	Stainless Steel	
8	Valve Stem	Stainless Steel	
9	Strainer Screen	Stainless Steel	

Materials continued on next page

Materials - 2"* to 4"

***ANSI 300 only (continued)**

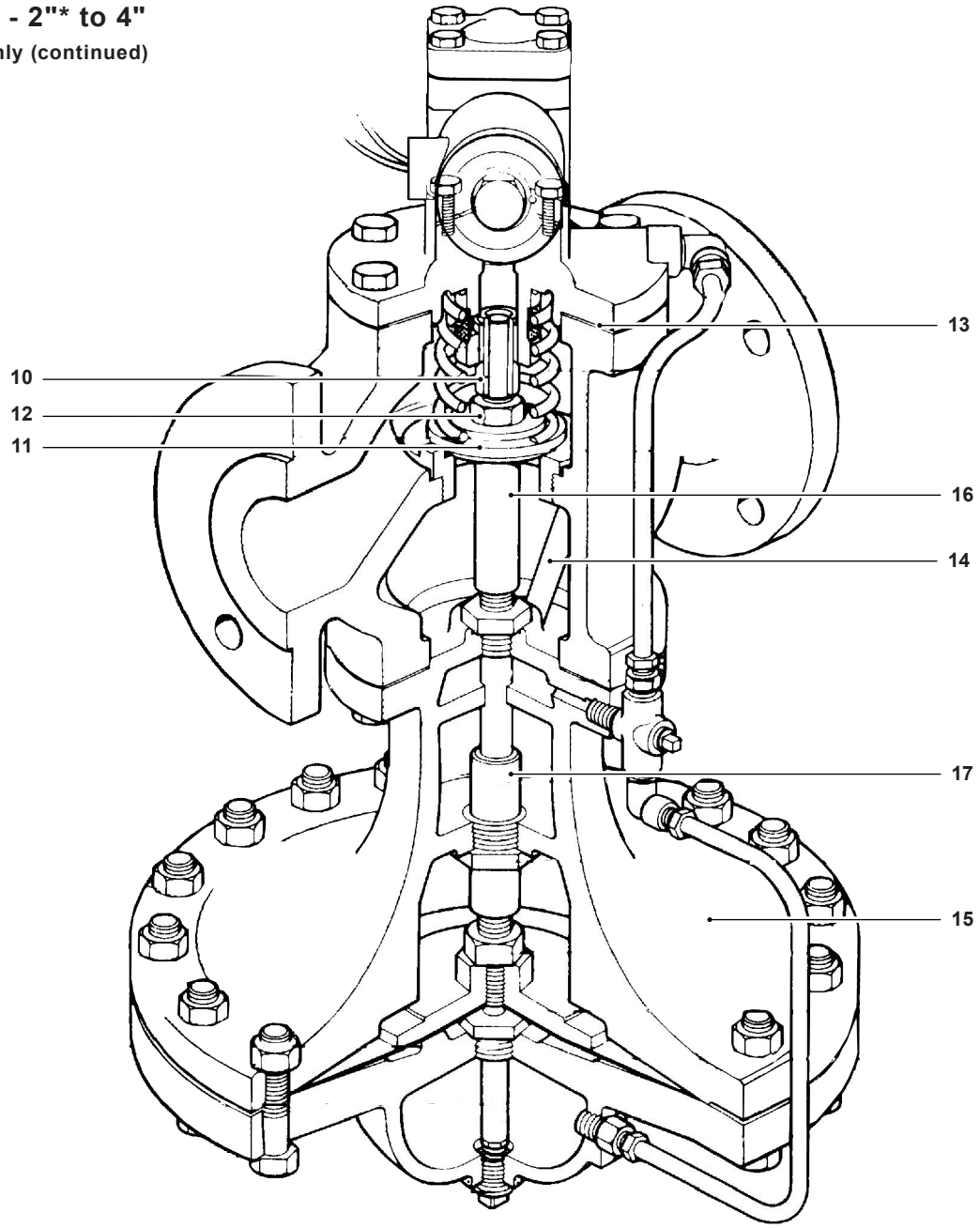

No.	Part	Material	
10	Valve Stem Sleeve	Stainless Steel	
11	Spring Guide	Cast Iron ½"-2"	
		CRS 2"* - 4"	
12	Nut	Steel	
13	Cover Gasket	Graphite	
14	Pressure Equalizer Pipe	Stainless Steel	
15	Upper Diaphragm Case	Cast Iron	ASTM A 126 CL B
		Cast Steel	ASTM A216 Gr WCB
16	Stem Bushing (2-½" - 4" Cast Steel only)	Stainless Steel	
17	Diaphragm Plate Stem	Stainless Steel	

Materials continued on next page

Materials - 2"* to 4"

***ANSI 300 only (continued)**

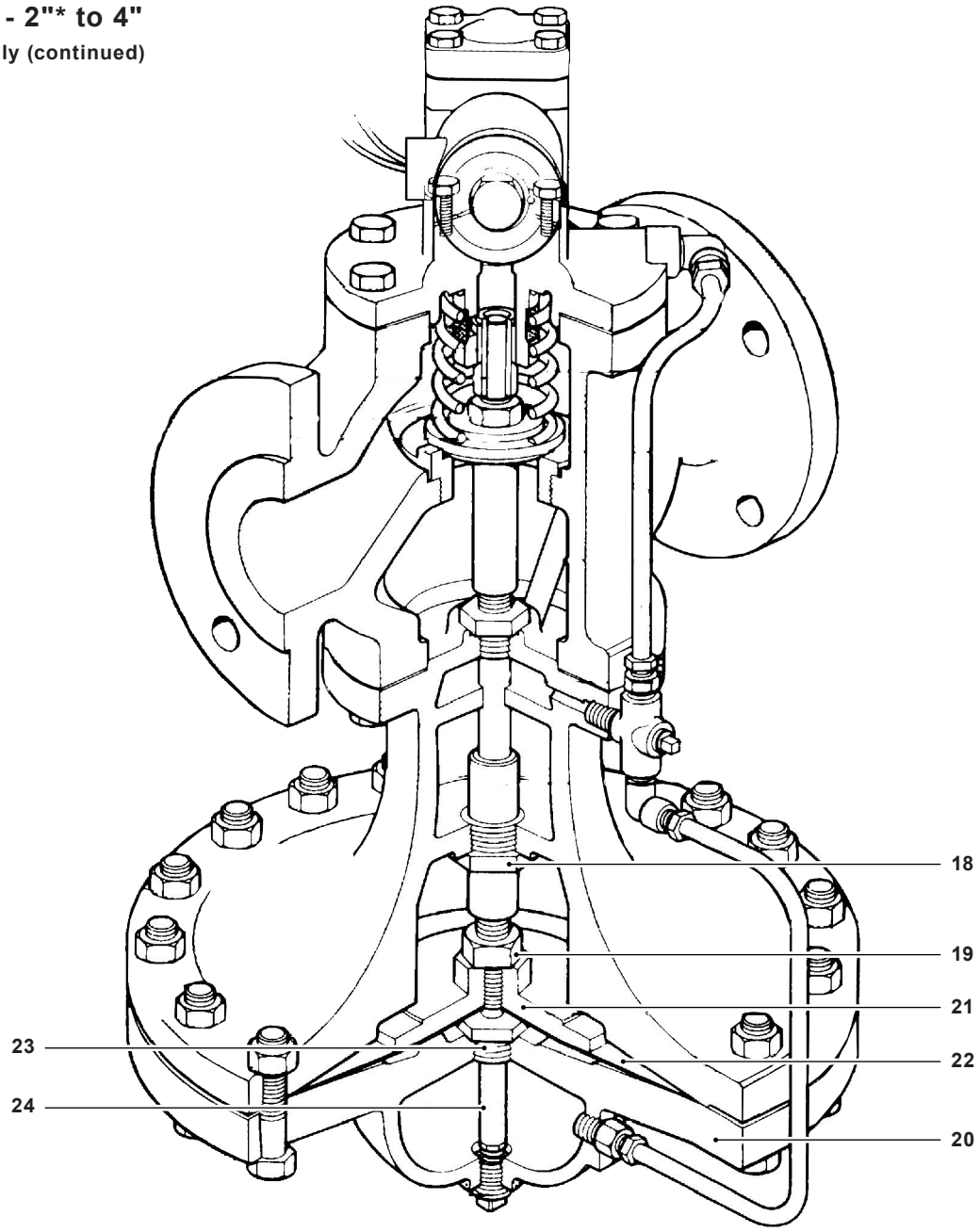

No.	Part	Material	
18	Diaphragm Stem Guide	Stainless Steel	
19	Nut	Brass ½" - 2"	
		Steel 2"* - 4"	
20	Lower Diaphragm Case	Cast Iron	ASTM A 126 CL B
		Cast Steel	ASTM A216 Gr WCB
21	Diaphragm Plate	Brass ½" - 2"	
		C.I. 2"* - 4"	
22	Main Diaphragm (2 ply)	Stainless Steel	
23	Bushing	CRS	
24	Tube and Orifice	Stainless Steel	

Materials continued on next page

Materials - 2"* to 4"

***ANSI 300 only (continued)**

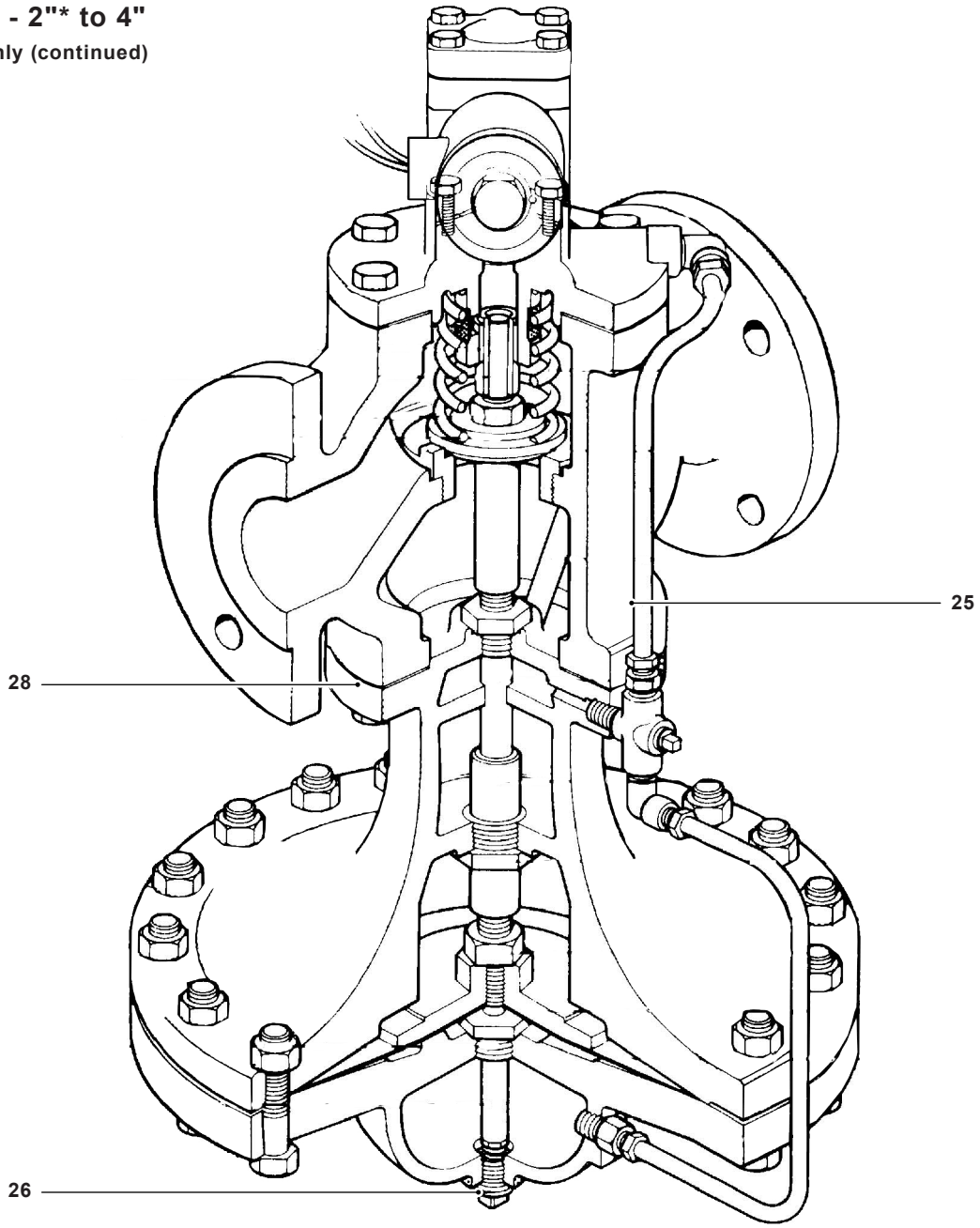

No.	Part	Material
25	Tubing Assembly	Copper
		Brass
26	Plug (Cast Iron)	Brass
	Plug (Cast Steel)	Steel
28	Body Gasket	½" - 2" Copper Clad
		2"* - 4" Graphite

Dimensions/weights (approximate) in inches (mm) and lbs (kg)

½" to 2"

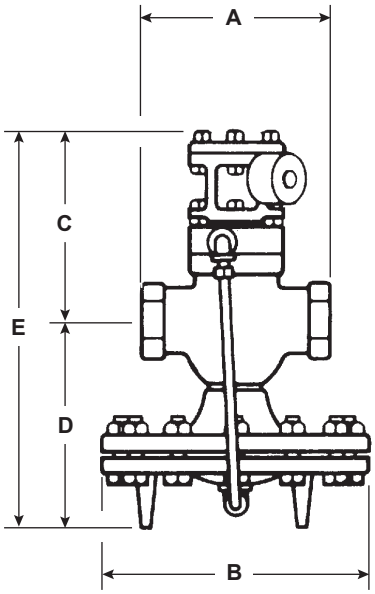

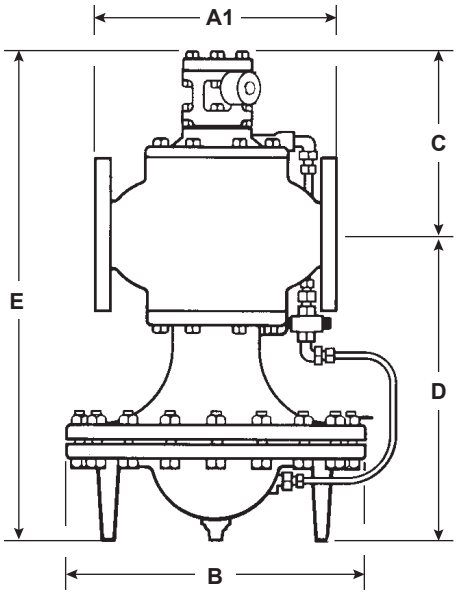

2"* to 4"

Size	A	ANSI 125 ANSI 150 A1	ANSI 250 ANSI 300 A1	B	C	D	E	Weight Cast Iron	Weight Cast Steel
½", ¾"	5.5 (140)			7.6 (193)	6.1 (155)	6.2 (157)	12.25 (311)	28 lb (12.7 kg)	31 lb (14.1 kg)
1"	6.0 (152)			8.6 (218)	6.0 (152)	6.75 (171)	12.75 (324)	35 lb (15.9 kg)	38 lb (17.2 kg)
1¼", 1-½"	7.25 (184)				6.6 (168)	7.1 (180)	13.6 (345)	40.5 lb (18.4 kg)	44 lb (20 kg)
2"	8.5 (216)		9.0 (228)	10.6 (269)	7.2 (183)	8.2 (208)	15.4 (391)	65 lb (29.5 kg)	71 lb (32.2 kg)
2-½"		10.9 (277)	11.5 (292)	13.6 (345)	7.9 (201)	13.9 (353)	21.8 (554)	153.5 lb (69.6 kg)	167 lb (75.8 kg)
3"		11.75 (298)	12.5 (318)			14.4 (367)	22.25 (565)	184 lb (83.7 kg)	201 lb (91.2 kg)
4"		13.9 (353)	14.5 (368)	15.6 (396)	9.1 (231)	16.1 (409)	25.25 (641)	280.5 lb (127 kg)	305 lb (138 kg)

Sample specification

The On/Off operation of the main valve shall be controlled by an electrical solenoid pilot which is bolted directly to the main valve and may be removed without disturbing the control tubing connections. The main valve shall be single seated with hardened stainless steel trim. The valve body shall be cast iron (cast steel).
The electric pilot shall have a NEMA 2, 3, 3S, 4, and 4X enclosure with 120 VAC / 60 Hz coil.

Installation

The valve should be installed in a horizontal pipe with suitable bypass and isolating valves. A steam trap should be installed upstream to prevent condensate from reaching the valve. The trap and valve should both be protected with a strainer.

Maintenance

Complete installation and maintenance instructions are given in IM-P717-02-US, a copy of which is supplied with each valve. Available spare parts are shown on TI-P717-09-US and TI-P235-02-US.

Standard Transmission tubing for Cast Iron Valve will be Copper with Brass fittings.

Standard Transmission tubing for Cast Steel Valve will be Stainless Steel.

If a different material is required order the Spare Part Kit

Stainless Steel Transmission Tubing Kits		
Item #	**Size**	**Description**
71464	½", ¾"	Kit, ½"-¾", 25 Valve, Stainless Steel, Transmission tubing
71465	1"	Kit, 1", 25 Valve, Stainless Steel, Transmission tubing
71466	1¼", 1½"	Kit, 1¼"-1½", 25 Valve, Stainless Steel, Transmission tubing
71467	2"	Kit, 2", 25 Valve, Stainless Steel, Transmission tubing
71468	2½"	Kit, 2½", 25 Valve, Stainless Steel, Transmission tubing
71469	3"	Kit, 3", 25 Valve, Stainless Steel, Transmission tubing
71470	4"	Kit, 4", 25 Valve, Stainless Steel, Transmission tubing

Copper Tubing Transmission Line Kits		
Item #	**Size**	**Description**
57302	½", ¾"	Transmission tubing kit, ½"-¾", 25 Valve
57303	1"	Transmission tubing kit, 1", 25 Valve
57304	1¼", 1½"	Transmission tubing kit, 1¼"-1½", 25 Valve
57305	2"	Transmission tubing kit, 2", 25 Valve
58010	2½"	Transmission tubing kit, 2½", 25 Valve
58011	3"	Transmission tubing kit, 3", 25 Valve
58012	4"	Transmission tubing kit, 4", 25 Valve