Local regulations may restrict the use of this product to below the conditions quoted.
In the interests of development and improvement of the product, we reserve the right to change the specification without notice. © Copyright 2026

Combination Pressure/Temperature Regulator ½" to 4" 25PT

Description

The 25PT eliminates the need for a separate pressure regulator and a temperature regulator. Normal operation is controlled by the temperature pilot, and the pressure pilot sets an upper limit on the downstream steam pressure. The temperature pilot has a calibrated dial for accurate temperature setting, and is available with a variety of solid-fill sensing bulbs (See TI-P235-07-US). The standard capillary tubing length is 8 feet (2.4 meters), with an optional standard length of 15 feet (4.6 meters).

Model	**25PT**			
Sizes	½" to 2" (DN15 to DN50)	2½", 3", 4" (DN65, DN80, DN100)	½" to 2" (DN15 to DN50)	2", 2½", 3" 4" (DN50, DN65, DN80, DN100)
Connections	NPT	ANSI 125	NPT	ANSI 300
Construction	Cast iron		Cast steel	
Options		ANSI 250		ANSI 150 (excludes 2")
	Non-Standard capillary tubing length (see TI-P235-07-US)			
Transmission Tubing	Copper Tubing		Stainless Steel Tubing	

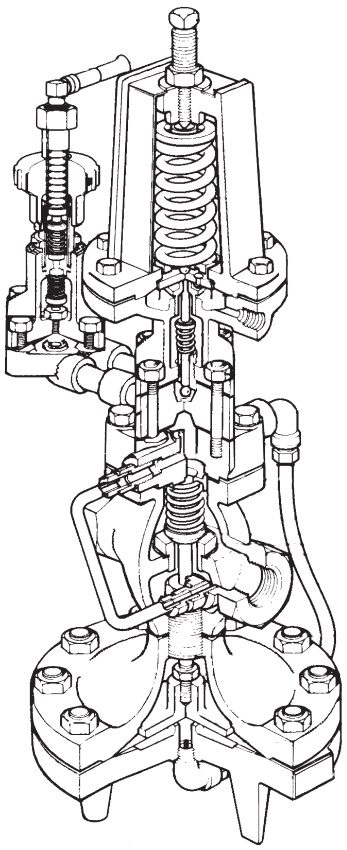

½" to 2"

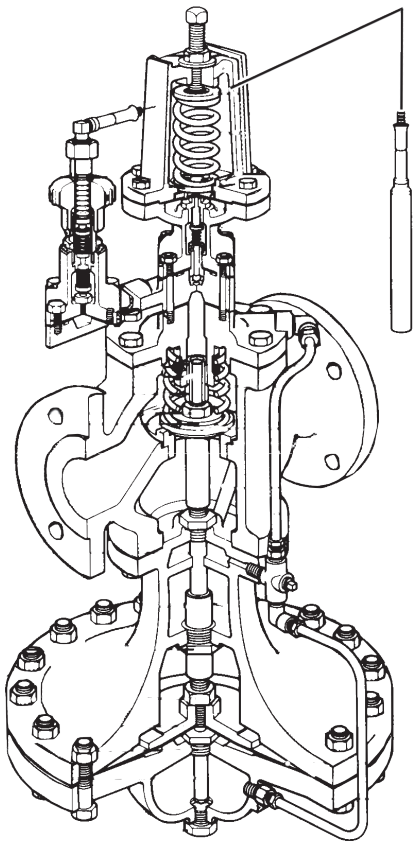

2"* to 4"
***ANSI 300 ONLY**

Typical applications

Storage steam water heaters, instantaneous heat exchangers and converters, air handling coils, tank heating coils, steam jacketed vessels, steam chests, molds and platens, and other temperature control applications where it is necessary or desirable to set an upper limit on the delivered steam pressure.

Capacities

The regulator is sized according to the temperature control requirements. For selection and sizing, see TI-P235-18-US.

Limiting operating conditions

PMO	Maximum operating pressure	NPT:	250 psi g (17 bar g) @ 450 °F (232 °C)
		ANSI 125:	125 psi g (8 bar g) @ 450 °F (232 °C)
		ANSI 250:	250 psi g (17 bar g) @ 450 °F (232 °C)
		ANSI 150:	185 psi g (12 bar g) @ 450 °F (232 °C)
		ANSI 300:	300 psi g (20 bar g) @ 450 °F (232 °C)
Maximum Operating Temperature			450 °F (232 °C)

*The temperature of the sensing bulb must not exceed 350 °F (177 °C)

Standard temperature ranges

30 °F to 90 °F	(0 °C to 32 °C)
60 °F to 120 °F	(16 °C to 49 °C)
100 °F to 160 °F	(38 °C to 71 °C)
120 °F to 180 °F	(49 °C to 82 °C)
160 °F to 220 °F	(71 °C to 104 °C)
200 °F to 260 °F	(93 °C to 127 °C)
260 °F to 320 °F	(127 °C to 160 °C)

Downstream pressure ranges

For the following downstream pressures, three color-coded pilot valve springs are available:

Yellow	Blue	Red
3 to 30 psi	20 to 100 psi	80 to 290 psi

Pressure shell design conditions

PMA	Maximum allowable pressure	Cast iron	250 psi g @ 0-450 °F	(17 bar g @ 0-232 °C)
		Cast steel	300 psi g @ 0-600 °F	(21 bar g @ 0-316 °C)
TMA	Maximum allowable temperature	Cast iron	450 °F @ 0-250 psi g	(232 °C @ 0-17 bar g)
		Cast steel	600 °F @ 0-300 psi	(316 °C @ 0-21 bar g)

Materials

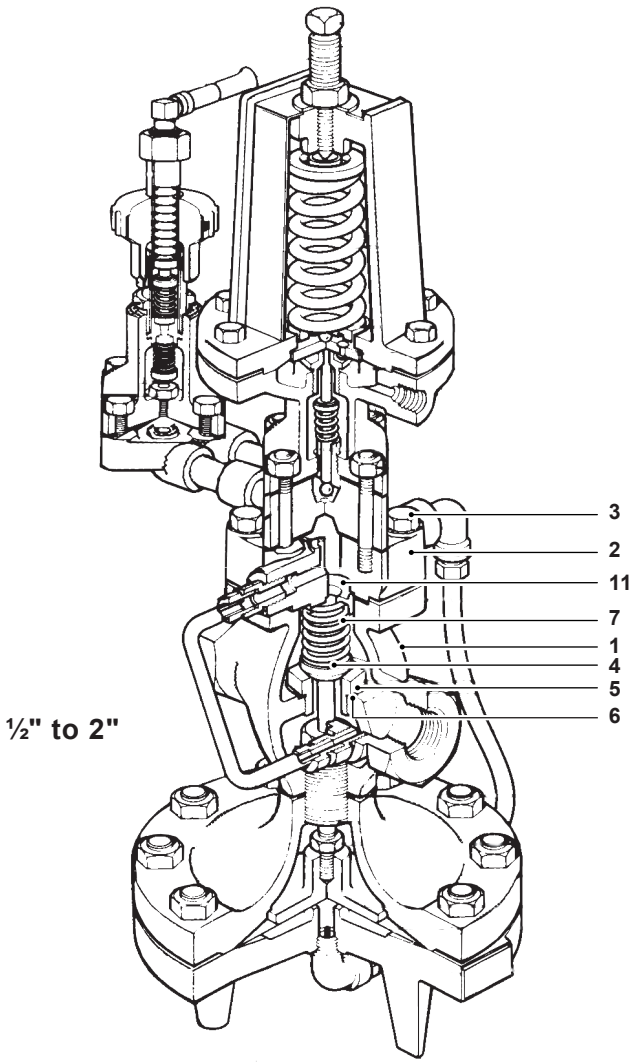

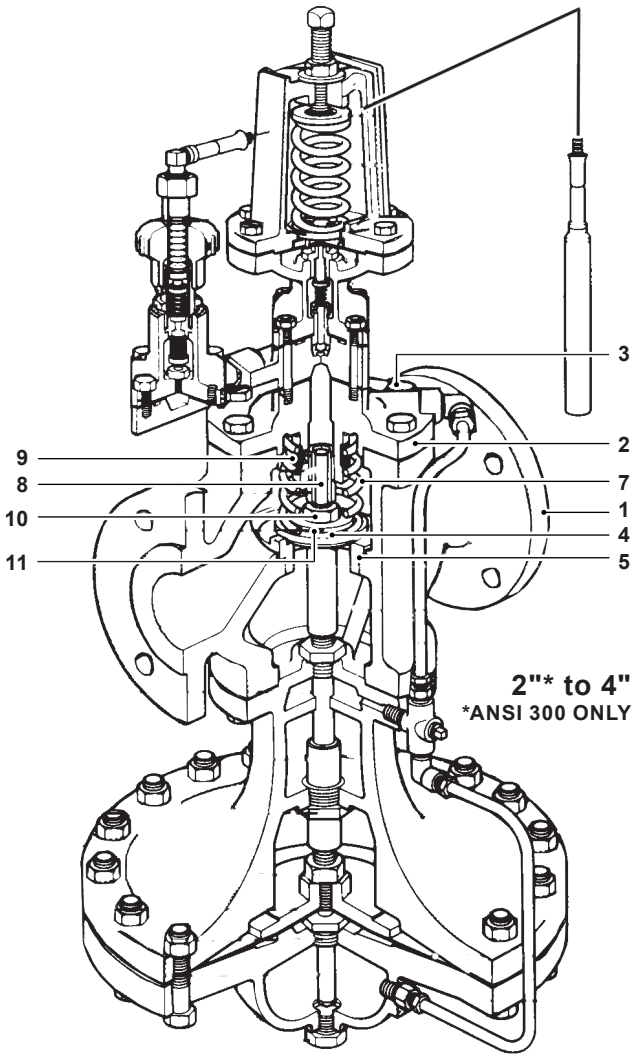

No.	Part	Material	
1	Valve Body	Cast iron	ASTM A 126 CL B
		Cast steel	ASTM A216 Gr WCB
2	Cover	Cast iron	ASTM A 126 CL B
		Cast steel	ASTM A216 Gr WCB
3	Cover Bolts	Steel	ASTM A449
4	Main Valve Head	Stainless steel	
5	Main Valve Seat	Stainless steel	
6	Main Valve Seat Gasket	Copper	
7	Valve Return Spring	Stainless steel	
8	Valve Stem	Stainless steel	
9	Strainer Screen	Stainless steel	
10	Valve Stem Sleeve	Stainless steel	
11	Spring Guide	Cast iron ½"-2" (DN15 - DN50)	
		CRS 2"* - 4" (DN50 - DN100)	

Materials continued on next page

Materials (continued)

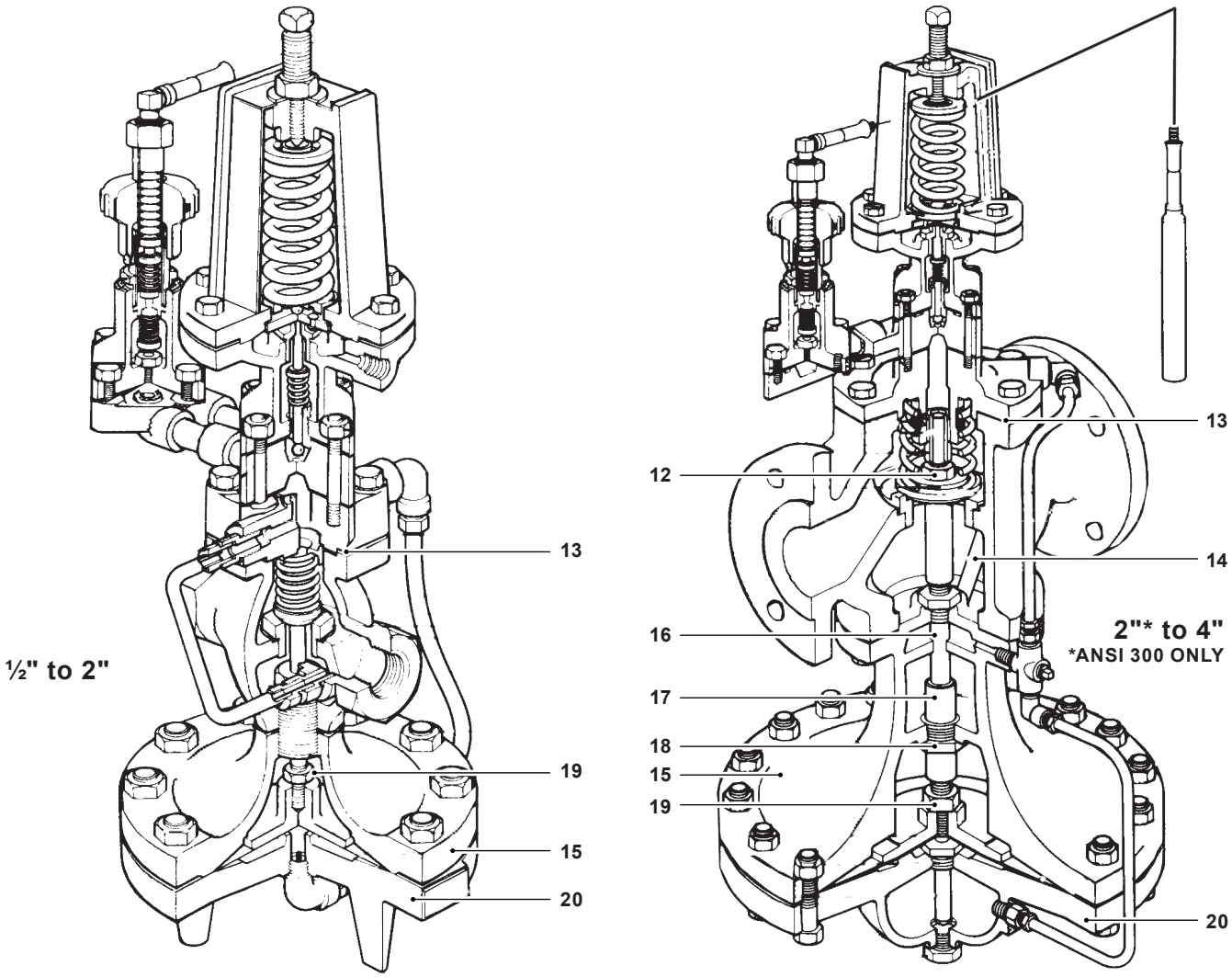

No.	Part	Material	
12	Nut	Steel	
13	Cover Gasket	Graphite	
14	Pressure Equalizer Pipe	Stainless steel	
15	Upper Diaphragm Case	Cast iron	
		Cast steel	
16	Stem Bushing (2½" - 4" Cast steel only)	Stainless steel	AISI 303
17	Diaphragm Plate Stem	Stainless steel	
18	Diaphragm Stem Guide	Stainless steel	
19	Nut	Brass ½" - 2" (DN15 - DN50)	
		Steel 2"* - 4" (DN50 - DN100)	
20	Lower Diaphragm Case	Cast iron	ASTM A 126 CL B
		Cast steel	ASTM A216 Gr WCB

Materials continued on next page

Materials (continued)

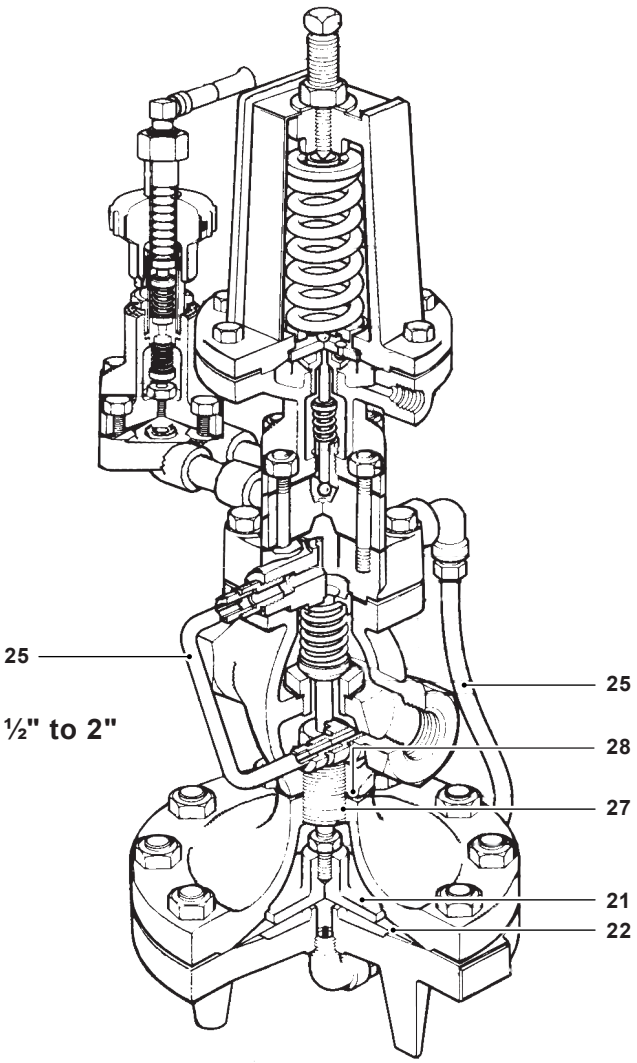

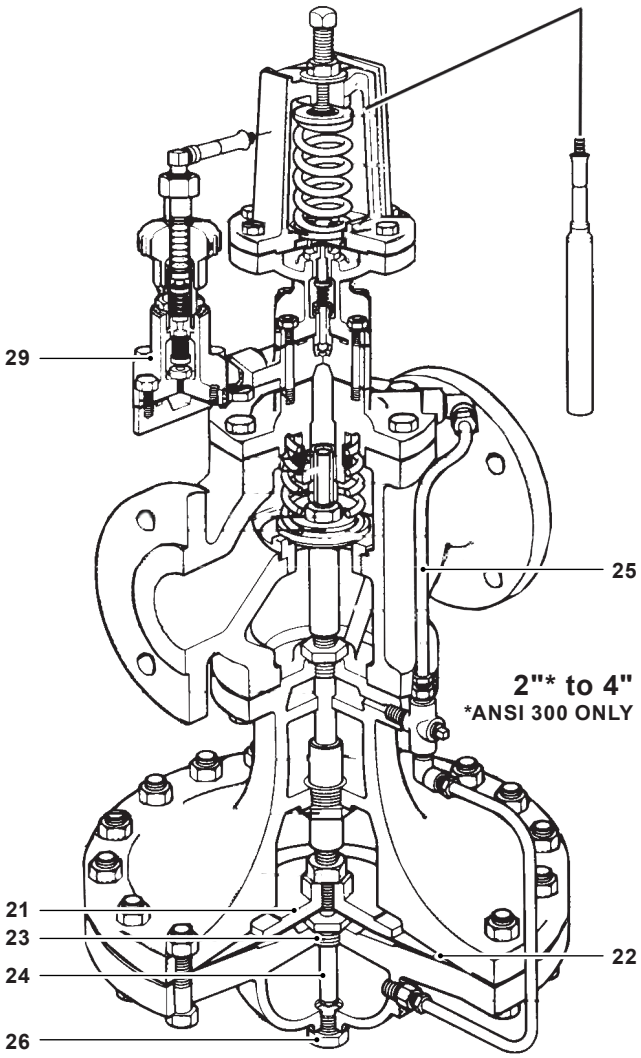

No.	Part		Material	
21	Diaphragm Plate		Brass ½" - 2" (DN15 - DN50)	
			C.I. 2"* - 4" (DN50 - DN100)	
22	Main Diaphragm (2 ply)		Stainless steel	
23	Bushing		CRS	
24	Tube & Orifice		Stainless steel	
25	Tubing Assembly Cast Iron		Copper / Brass	
	Tubing Assembly Cast Steel		Stainless Steel	
26	Plug	(Cast iron)	Brass	
		(Cast steel)	Steel	
27	Connector Stud		Stainless steel	
28	Body Gasket		½" - 2" Copper Clad (DN15 - DN50)	
			2"* - 4" Graphite (DN50 - DN100)	
29	Pilot Valve Body		Cast iron	ASTM A 126 CL B
			Cast steel	ASTM A216 Gr WCB

Materials continued on next page

Materials (continued)

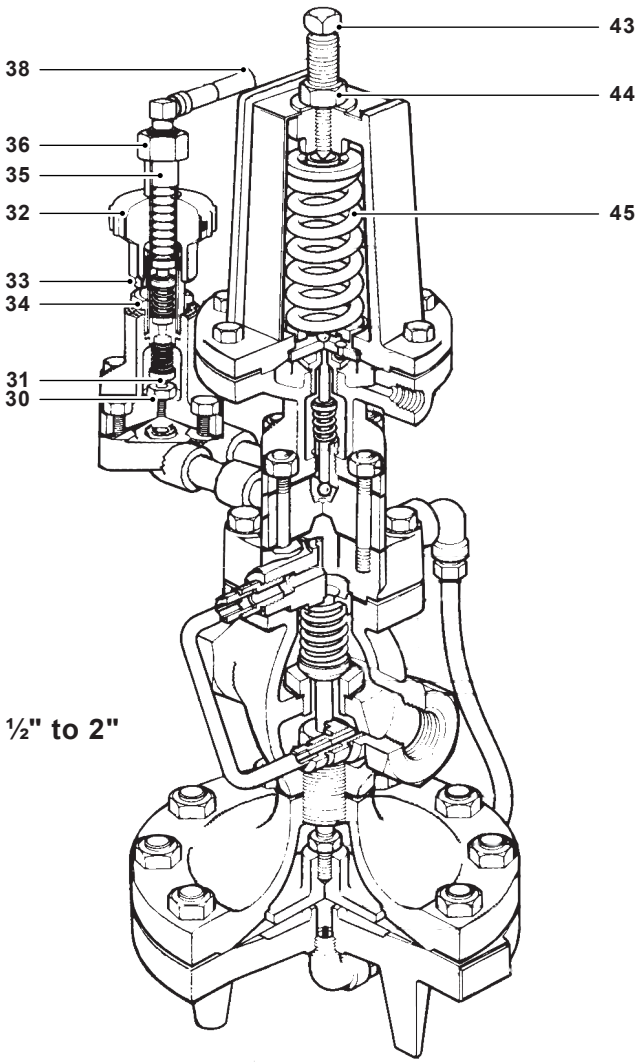

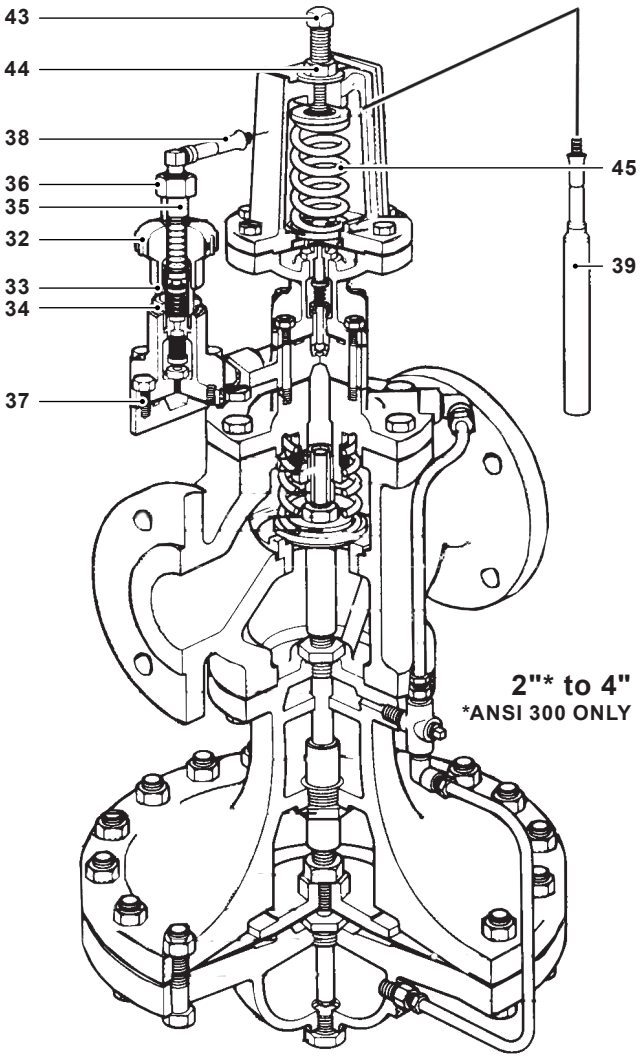

No.	Part	Material
30	Pilot Valve Seat	Stainless steel
31	Pilot Valve Head	Stainless steel
32	Adjustment Knob	Phenolic
33	Pointer	Stainless steel
34	Extension Nut	Brass
35	Case Tube	Brass
36	Retaining Nut	Brass
37	Pilot Mounting Screws	Steel
38	Capillary Tube	Varies with style selected
39	Bulb	Varies with style selected
43	Adjustment Screw	Stainless steel
44	Jam Nut	Brass
45	Pilot Valve Spring	Steel

Materials continued on next page

Materials (continued)

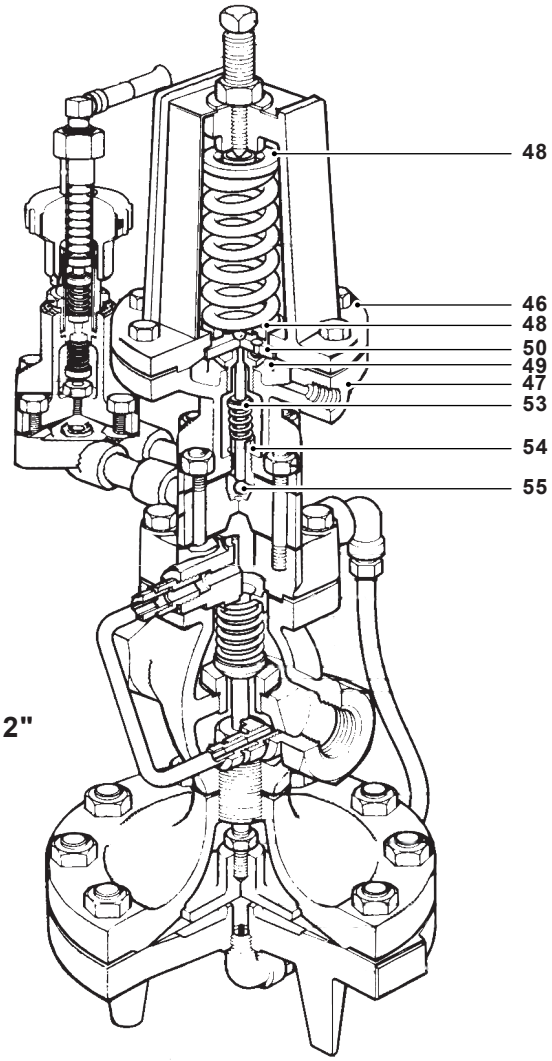

½" to 2"

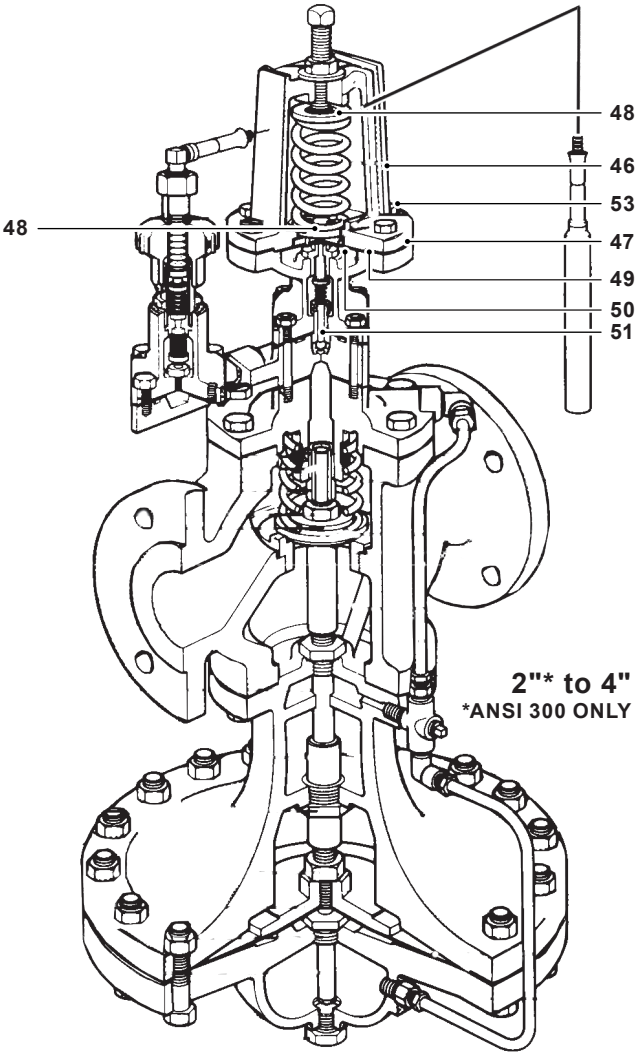

2"* to 4"
*ANSI 300 ONLY

No.	Part	Material	
46	Upper Diaphragm Case	Cast iron	
		Cast steel	
47	Lower Diaphragm Case	Cast iron	
		Cast steel	
48	Spring Plate	Steel	ASTM A569
49	Diaphragm	Stainless steel	
50	Diaphragm Plate	Brass	
51	Pilot Head Spring	Stainless steel	
52	Spring Retainer Cup	Stainless steel	
53	Retaining Ring	Brass	
54	Pilot Seat	Stainless steel	
55	Pilot Head	Stainless steel	
56	Head Stem	Stainless steel	

Materials continued on next page

Materials (continued)

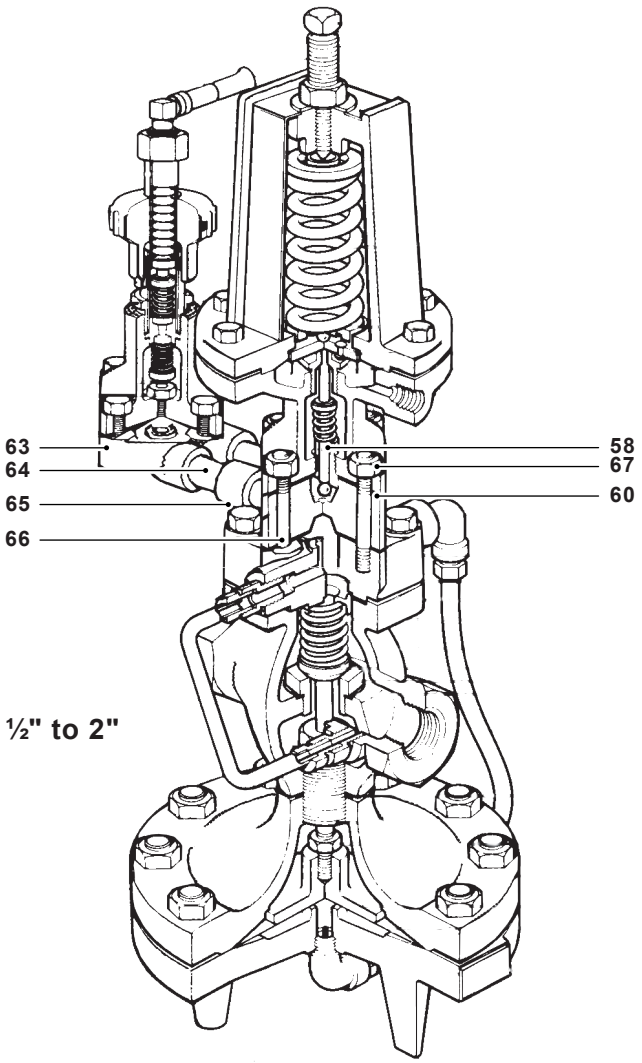

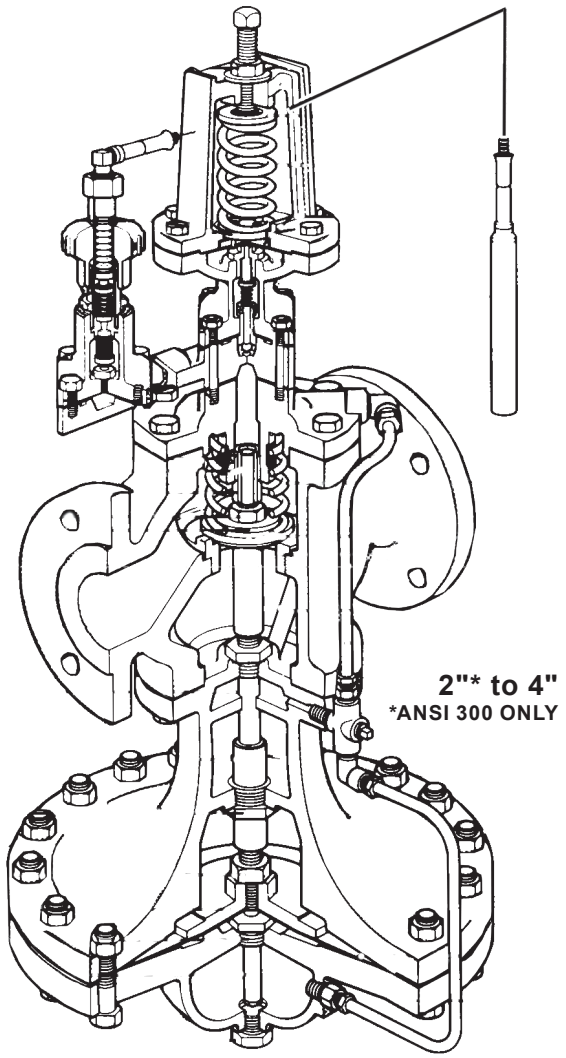

No.	Part	Material	
57	Stem Guide	Stainless steel	
58	Stem Guide Gasket	Stainless steel	
59	Seat Gasket	Stainless steel	
60	Pilot Gasket	Graphite	
61	Pilot Mounting Screws	Steel	ASTM A449
62	Diaphragm Case Screws	Steel	
63	"T" Pilot Adapter	Brass	
64	Adapter Pipe	Steel	
65	"P" Pilot Adapter	Ductile Iron	
		Cast steel	
66	Adapter Stud	Steel	
67	Adapter Nut	Steel	

Dimensions/weights (approximate) in inches (mm) and lbs (kg)

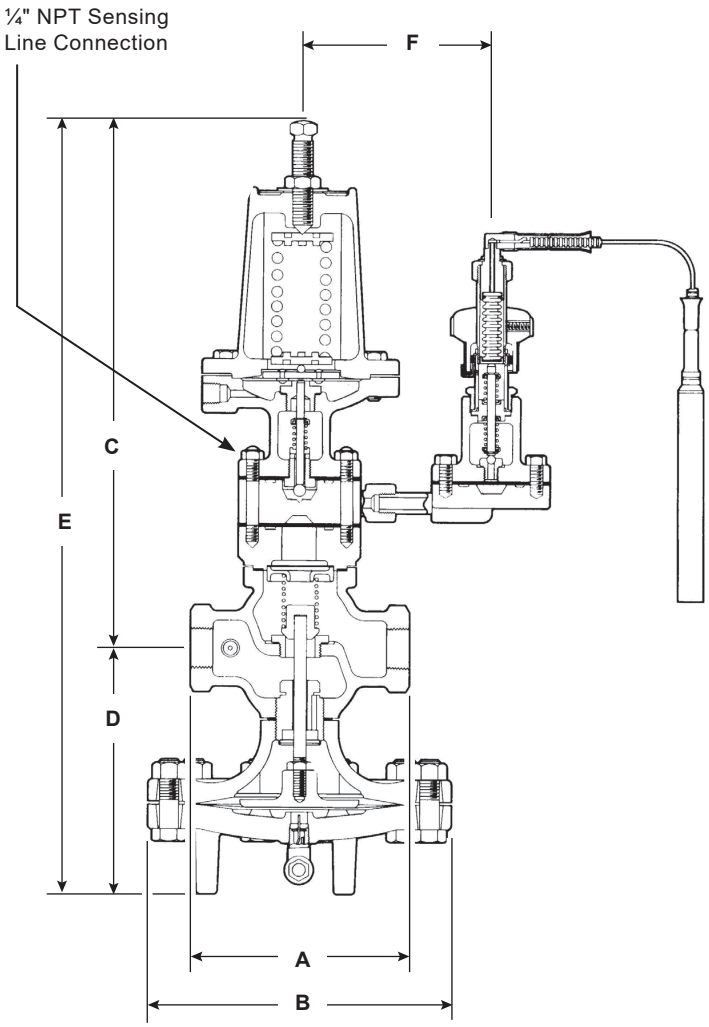

½" to 2"

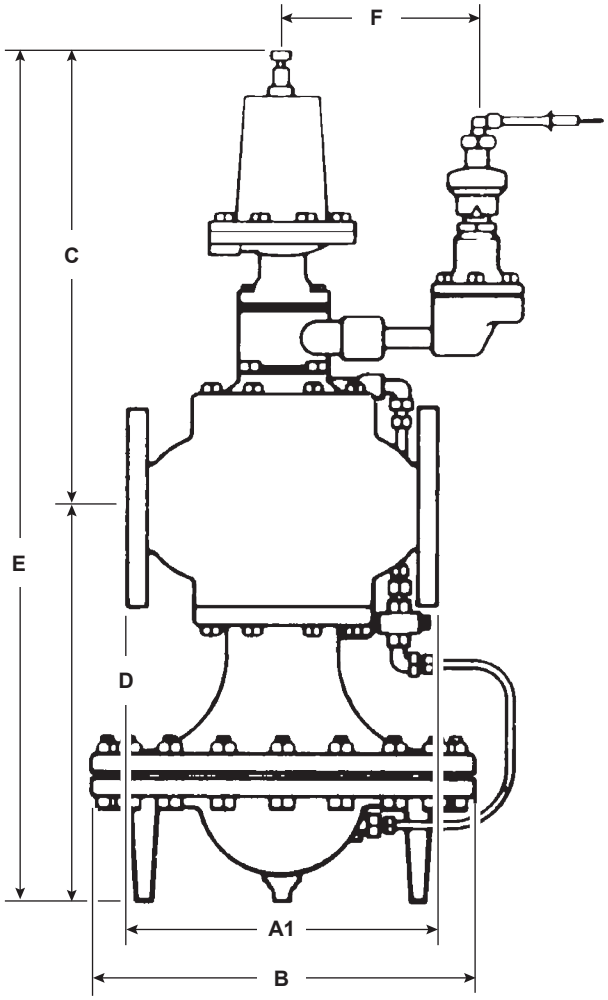

2"* to 4"

Size	A	ANSI 125 A1	ANSI 250 ANSI 300 A1	B	C	D	E	F	Weight	
									Cast iron	Cast steel
½", ¾"	5.5 (140)			7.6 (193)	13.25 (337)	6.2 (157)	19.4 (493)	5.0 (127)	38 lb (17.2 kg)	41 lb (18.6 kg)
1"	6.0 (152)			8.6 (218)	13.2 (335)	6.75 (171)	19.9 (505)	5.0 (127)	45 lb (20.4 kg)	49 lb (22.2 kg)
1¼", 1½"	7.25 (184)			8.6 (218)	13.75 (349)	7.1 (180)	20.8 (528)	5.0 (127)	50.5 lb (22.9 kg)	55 lb (25.0 kg)
2"	8.5 (216)		9.0 (229)	10.6 (269)	14.4 (366)	8.2 (208)	22.6 (574)	5.0 (127)	75 lb (34 kg)	82 lb (37.2 kg)
2½"		10.9 (277)	11.5 (292)	13.6 (345)	15.1 (384)	13.9 (353)	29.0 (737)	5.0 (127)	163.5 lb (74.2 kg)	178 lb (80.7 kg)
3"		11.75 (298)	12.5 (318)	13.6 (345)	15.0 (381)	14.4 (366)	29.4 (747)	5.0 (127)	194.5 lb (88.2 kg)	212 lb (96.2 kg)
4"		13.9 (353)	14.5 (368)	15.6 (396)	16.3 (414)	16.1 (409)	32.4 (823)	5.0 (127)	290.5 lb (132 kg)	316 lb (143 kg)

Sample specification

Pressure/Temperature Regulators shall be of the pilot-actuated, diaphragm-operated type with separate pressure and temperature pilots. The main valve shall be single-seated, with hardened stainless steel trim; the regulator shall be cast iron (cast steel). The pilots shall be removable without disturbing the control connections. The temperature setting shall be adjustable without the use of tools, and the set point shall be indicated on a calibrated dial. The thermostatic system shall be solid fill, and shall incorporate overheat protection. The regulator shall be capable of dead-end shut-off.

Installation

The regulator should be installed in a horizontal line with suitable bypass and isolating valves. A steam trap should be installed upstream to prevent condensate from reaching the regulator. The trap and regulator should both be protected with a strainer. The thermostatic bulb must be carefully located in the medium being heated. The pressure sensing line may be located either in the downstream piping or in the steam space. Complete installation instructions are given in IM-3-000-US.

Maintenance

Complete installation and maintenance instructions are given in IM-3-000-US, a copy of which is supplied with each regulator. Available spare parts are shown on TI-P717-09-US and TI-P235-02-US.

Standard Transmission tubing for Cast Iron Valve will be Copper with Brass fittings.

Standard Transmission tubing for Cast Steel Valve will be Stainless Steel.

If a different material is required order the Spare Part Kit

Stainless Steel Transmission Tubing Kits

Item #	Size	Description
71464	½", ¾"	Kit, ½"-¾", 25 Valve, Stainless Steel, Transmission tubing
71465	1"	Kit, 1", 25 Valve, Stainless Steel, Transmission tubing
71466	1¼", 1½"	Kit, 1¼"-1½", 25 Valve, Stainless Steel, Transmission tubing
71467	2"	Kit, 2", 25 Valve, Stainless Steel, Transmission tubing
71468	2½"	Kit, 2½", 25 Valve, Stainless Steel, Transmission tubing
71469	3"	Kit, 3", 25 Valve, Stainless Steel, Transmission tubing
71470	4"	Kit, 4", 25 Valve, Stainless Steel, Transmission tubing

Copper Tubing Transmission Line Kits

Item #	Size	Description
57302	½", ¾"	Transmission tubing kit, ½"-¾", 25 Valve
57303	1"	Transmission tubing kit, 1", 25 Valve
57304	1¼", 1½"	Transmission tubing kit, 1¼"-1½", 25 Valve
57305	2"	Transmission tubing kit, 2", 25 Valve
58010	2½"	Transmission tubing kit, 2½", 25 Valve
58011	3"	Transmission tubing kit, 3", 25 Valve
58012	4"	Transmission tubing kit, 4", 25 Valve