Local regulations may restrict the use of this product to below the conditions quoted.
In the interests of development and improvement of the product, we reserve the right to change the specification without notice. © Copyright 2025

VLM30/VLM30 Food+ In-line Vortex Flowmeter

Description

Vortex flowmeters measure the flow of liquid, gas and steam by detecting the frequency at which vortices are alternately shed from a bluff body. According to proven laws of physics, the frequency at which the vortices are alternately shed is directly proportional to the flow velocity.

In-line vortex flowmeters measure flow by detecting the local velocity at a strategically located position within the pipe. The VLM30 detects the frequency at which vortices are alternately shed from the bluff body located within the sensor head.

The VLM30 uses the local velocity, along with other parameters, such as fluid type, pipe size and Reynolds number to calculate the average pipe velocity, and consequently, the volumetric flowrate.

The VLM30 In-line Vortex Flowmeter utilises three primary sensing elements to measure the mass flowrate of steam, liquids and gases:

- Vortex shedding velocity sensor
- Internal RTD temperature sensor (std) or external temperature transmitter
- External pressure transducer (supplied separately)

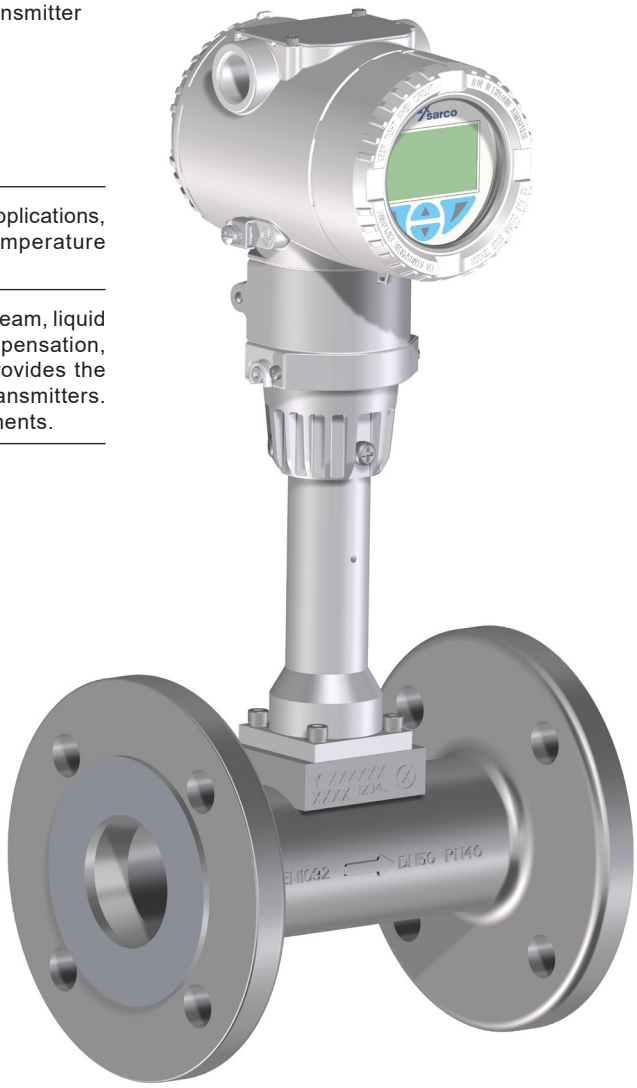

VLM30 range

The **VLM30-S** vortex flowmeter for saturated steam, liquid and gas applications, with graphical display, optional binary output and integrated temperature measurement.

The **VLM30-E** vortex flowmeter for saturated steam, superheated steam, liquid and gas applications, with integrated binary output, temperature compensation, flow computer and energy calculation functionality. The VLM30-E provides the possibility to connect external temperature, pressure and density transmitters. Gas analyser outputs may also be integrated for enhanced measurements.

Compliance and approvals:

- EMC Directive IEC61326-1 2020
- PED Directive EN 12516-2:2014+A1:2021
- CRN: 0F24350.5C (CA)
- Food+ : EC1935.2004
- Food+ : FDA

Approvals

EMC

Electromagnetic compatibility of equipment for process and lab control technology 5/93 and EMC Directive 2004/108/EC (IEC61326-1 2020). Devices with HART communication are optionally available with EMC protection in accordance with NAMUR NE 21.

Food+ EC1935

DN15 to DN150 range available with a food contact regulation Declaration of Compliance.

Designed, manufactured and approved for Steam and Condensate applications, the VLM30 PTFE seat range Food+ product complies with:

- (EC)1935:2004 Materials and Articles Intended to come into Contact with Food.
- (EC)2023:2006 Good Manufacturing Practice for Materials and Articles Intended to come into Contact with Food.
- (EU)10/2011 Plastic Materials and Articles Intended to come into Contact with Food.

This product is intended to be connected into a system that can operate a food contact compliant process.

A list of the materials that could come directly or indirectly into contact with foodstuffs can be found in the Declaration of Compliance available for this product.

Food+ FDA

DN15 - DN300 :

- FDA Code of Federal Regulations - title 21 - Food and Drugs.

Caution: When selecting a vortex flow meter for steam flow measuring, care must be taken around the low flow velocity as this can cause instability in the flow measurement readings. Please ensure the appropriate flow meter size is selected via the sizing tool for the application.

Sizes and pipe connections

Flanged [1]
DN15, DN25, DN40, DN50, DN80, DN100, DN150, DN200 and DN300
Flanged EN 1092-1 PN16, PN40, PN63, PN100 connections
or
½", 1", 1½", 2", 3", 4", 6", 8", 10" and 12"
Flanged ASME B16.5 Class 150, 300 and 600 connections

Wafer type [2]
DN25, DN40, DN50, DN80, DN100 and DN150 suitable for fitting between EN 1092-1 PN40/PN63 flanges
or
1", 1½", 2", 3", 4" and 6" suitable for fitting between ASME B16.5 Class 300/600 flanges [2]

Notes:
[1] PN160/Class 900 available upon special request
[2] Class 600 or PN100 pressure rating available upon special request. Standard wafer unit is rated to PN63/Class 300.

Technical data

Wetted materials	**Meter Tube**	Stainless steel 1.4571 (AISI 316 Ti)/AISI 316L/CF8C/CF3M
	Sensor	Stainless steel 1.4571 (AISI 316 Ti)
	Sensor gasket *	PTFE O-ring/Graphite (optional for high temperature design)
Application	Any gas, liquid or steam compatible with stainless steel and other listed wetted materials. Not recommended for multi-phase fluids.	

* PTFE is the only available option for Food+ (EC1935/FDA).

Technical data (continued)

	Style connection	Rating
Pressure ratings	**Flanged** [1]	ASME Class 150
		ASME Class 300
		ASME Class 600
		EN 1092-1 PN16
		EN1092-1 PN40
		EN 1092-1 PN63
		EN 1092-1 PN100, DN25 - DN200 only
	Wafer [2]	For installing between 1" to 6" ASME Class 300/600 or DN15 to DN100 EN 1092-1 PN40/PN63/PN100 flanges

Notes:

[1] PN160 Available upon special request

[2] Class 600 or PN100 pressure rating available upon special request. Standard wafer unit is rated to PN63/Class 300.

		Supply voltage	Power consumption
Power requirements	**Transmitter**	12 to 42 Vdc	N/A
	Devices with HART communication	12 to 24 Vdc	< 1 W
	Devices with Modbus communication	9 to 30 Vdc	< 1 W
Display	**VLM30 - S**	Optional LCD indicator with four operating buttons for operation through front glass	
	VLM30 - E	Standard LCD indicator with four operating buttons for operation through front glass	
Output signal	**HART Digital Communication**	Support for HART communications up to the HART 7 protocol.	
	ModBus Communication	Modbus RTU - RS485 serial connection (optional for ModBus)	
	4 to 20 mA	Re-Transmission of flow or temperature	
	Digital Contact Output (option for VLM30-S)	Optocoupler, 16 to 30 Vdc, max 20mA. User configurable as Frequency, Pulse or Binary output.	
Input Signal	**4 to 20 mA**	For remote transmitter, e.g. for temperature, pressure, etc.	
		16 to 30 Vdc, 3.8 to 20.5 mA	
Cable Glands		Aluminium/M20 x 1.5 (2 Places)	
		Aluminium/½" NPT (2 Places)	

Pressure/temperature limits - VLM30

Flanged Devices - DIN Flange process connection

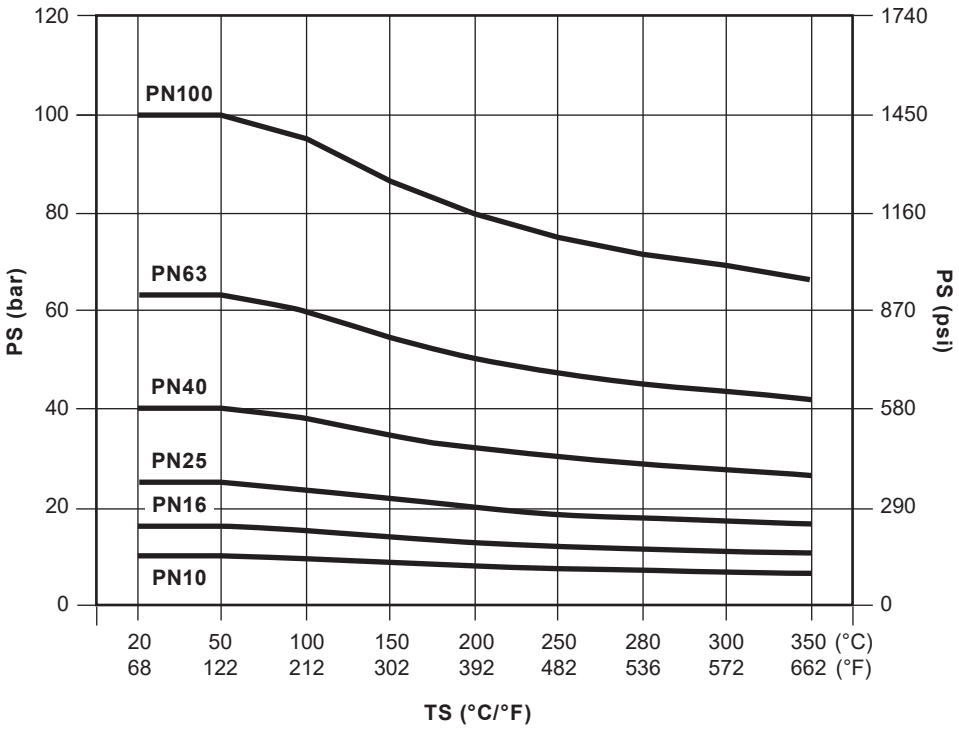

Flanged Devices - ASME Flange process connection

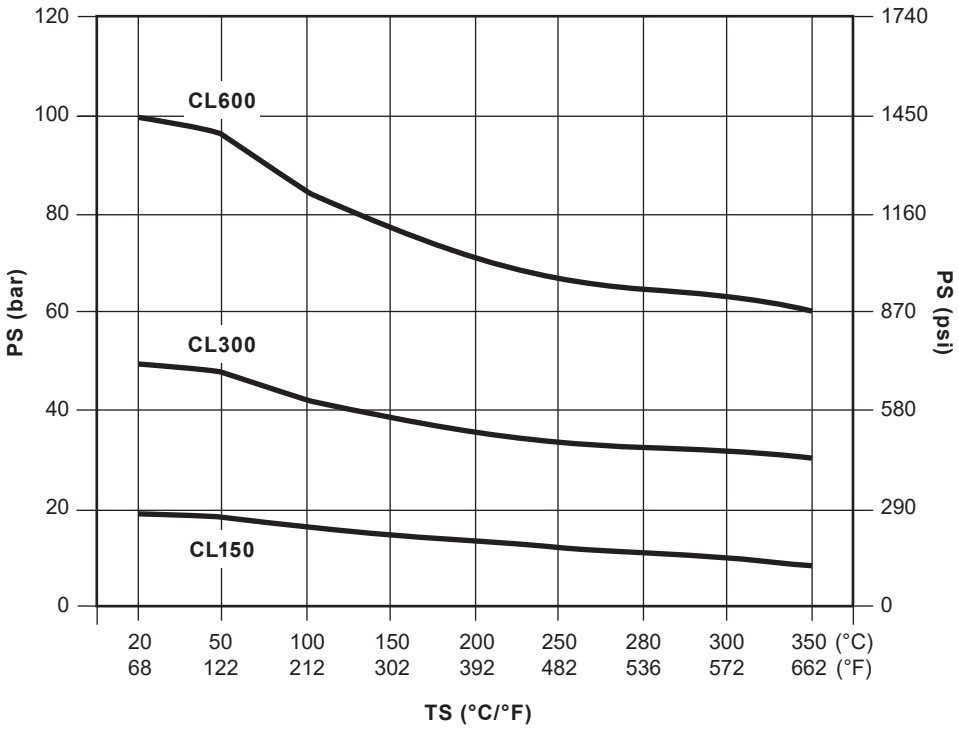

Wafer Type Devices - DIN Wafer type process connection

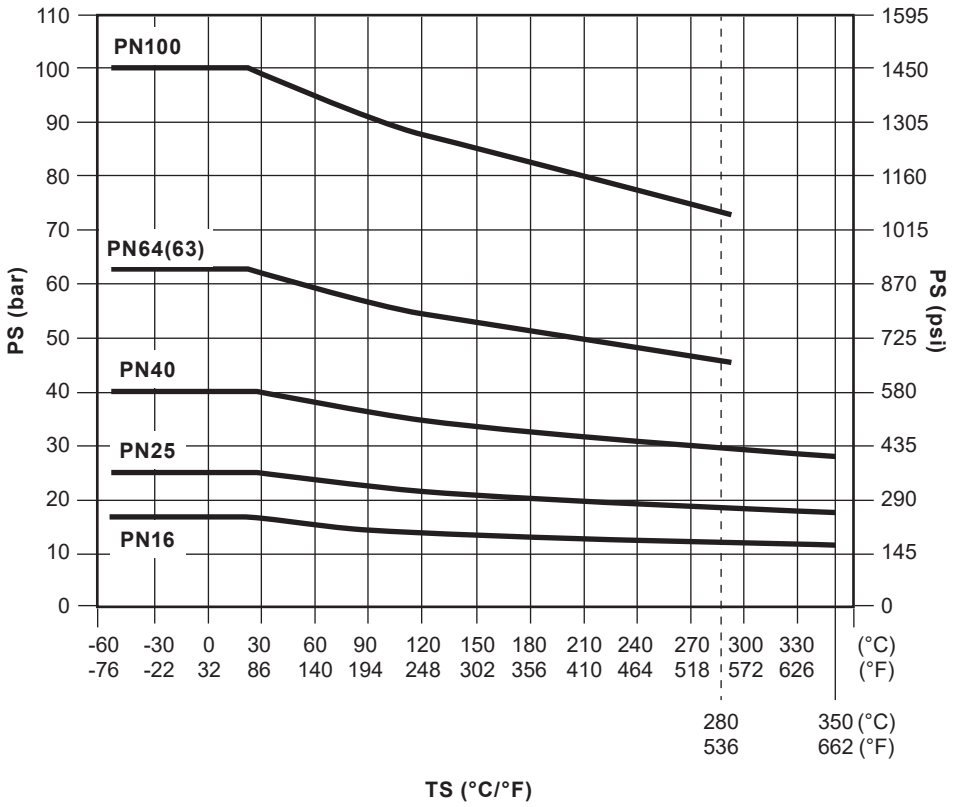

Wafer Type Devices - ASME Wafer type process connection

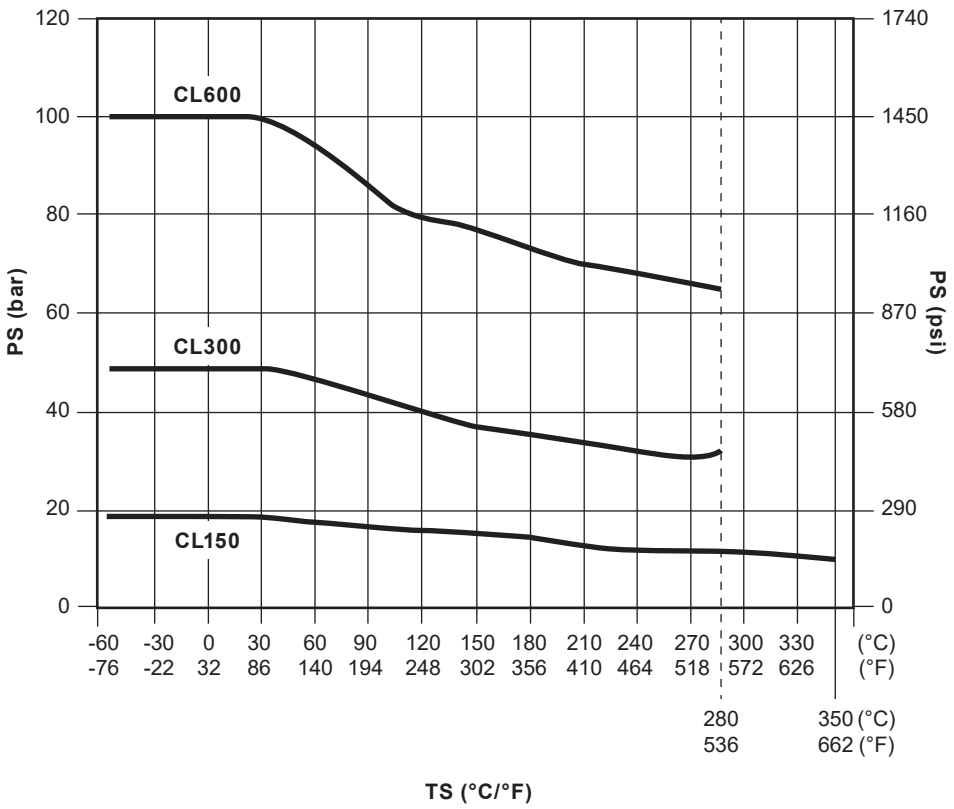

Body material: Stainless Steel

Body design conditions		Class 150	Class 300	Class 600
Minimum allowable temperature		-200 °C (-328 °F)		
Maximum process temperature		280 °C (536 °F)		
Minimum process temperature		-55 °C (-427 °F)		
Electronic ambient temperature range	Operating	-20 to +85 °C (-4 to +185 °F)		
	Storage	-40 to +85°C (-40 to +185 °F)		

Performance specifications

Under reference conditions

Accuracy	Mass flowrate accuracy for gas and steam based on 50 - 100% of pressure range

Process variables	Liquids	Gas and steam	Repeatability DN25-150 (1" - 6")	Repeatability DN200-300 (8" - 12")
Mass flowrate	±0.75%	±0.90% of rate	0.2%	0.25%
Volumetric flowrate	±0.65% of rate	±0.90% of rate		
Temperature	±1C or 1% of measured value			

Response time	200 ms (1 tau) or 3/f in seconds (with deactivated damping, the respective greater value shall apply). The response time depends on the respective vortex frequency f. Low flow rates can result in higher response times.

*** Indication of accuracy in % of the measured value (% of measured value)**

Measuring accuracy - Reference conditions

Flow measurement

Set flow range	0.5 to 1 x Q_{vmax}DN
Ambient temperature	20 °C (68 °F) ±2 K
Relative humidity	65 %, ±5 %
Air Pressure	86 to 106 kPa (12.5 to 15.4 psi)
Power supply	24 Vdc
Signal cable length (for remote mount design)	30 m (98 ft)
Current output load	250 Ω (only 4 to 20 mA)
Measuring medium for calibration	Water, approx. 20 °C (68 °F), 2 bar (29 psi)
	Air, 960 mbar abs. ±50 mbar (14 psi a ±0.7 psi), 24 °C ±4 °C (75 °F ±7 °F)
Calibration loop internal diameter	corresponds to inside diameter of device
Unobstructed straight inlet section	15 x DN [3]
Outlet section	5 x DN [3]
Pressure measurement	3 x DN to 5 x DN behind the flowmeter

[3] Check IM-P736-04 for full installation guidance.

Dimensions (approximate) in mm (inches)

Flanged type connection

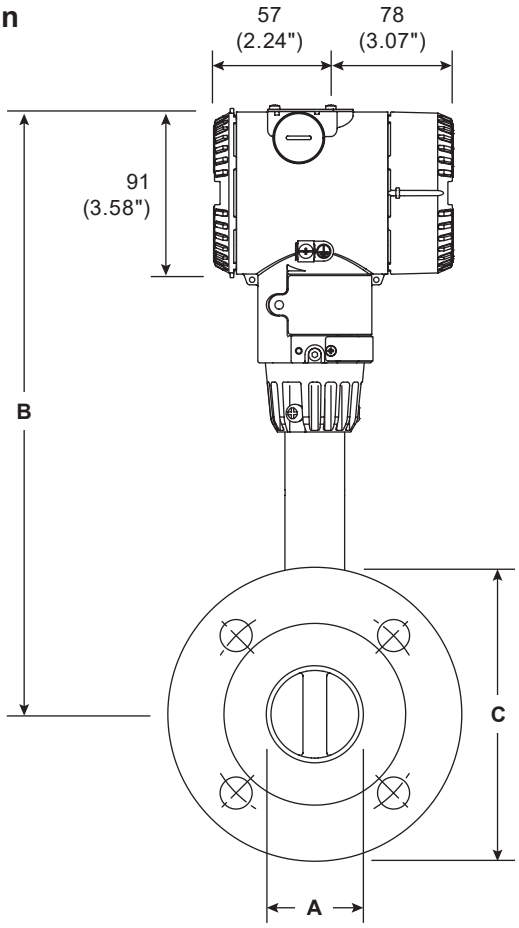

Connection	A	B	C Pressure rating EN1092-1					
EN1092-1	ASME		PN10	PN16	PN25	PN40	PN63	PN100
DN15	½"	342 (13.46)	95 (3.74)	95 (3.74)	95 (3.74)	105 (4.13)	105 (4.13)	105 (4.13)
DN25	1"	359 (14.13)	115 (4.53)	115 (4.53)	115 (4.53)	115 (4.53)	140 (5.51)	140 (5.51)
DN40	1½"	337 (13.27)	150 (5.91)	150 (5.91)	150 (5.91)	150 (5.91)	170 (6.69)	170 (6.69)
DN50	2"	334 (13.15)	165 (6.5)	165 (6.5)	165 (6.5)	165 (6.5)	180 (7.09)	195 (7.68)
DN80	3"	362 (14.25)	200 (7.87)	200 (7.87)	200 (7.87)	200 (7.87)	215 (8.46)	230 (9.06)
DN100	4"	371 (14.61)	220 (8.66)	220 (8.66)	235 (9.25)	235 (9.25)	250 (9.84)	265 (10.43)
DN150	6"	398 (15.67)	285 (11.22)	285 (11.22)	300 (11.81)	300 (11.81)	345 (12.56)	355 (13.98)
DN200	8"	460 (18.11)	340 (13.39)	340 (13.39)	360 (14.17)	375 (14.76)	415 (16.34)	
DN250	10"	485 (19.09)	395 (15.55)	405 (15.94)	425 (16.73)	450 (17.72)	470 (18.5)	
DN300	12"	510 (20.08)	445 (17.52)	460 (18.11)	485 (19.09)	515 (20.28)	530 (20.87)	

Dimensions (approximate) in mm (inches)

Flanged type connection (continued)

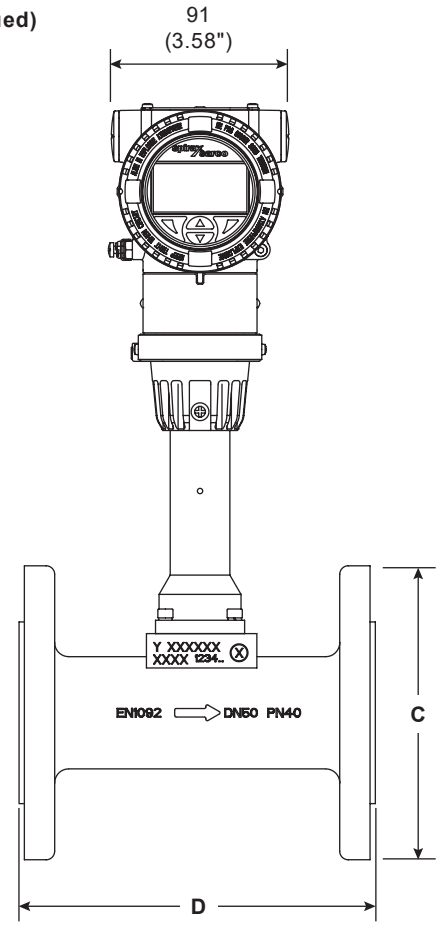

Connection	C Pressure rating ASME CLASS			D Pressure rating EN1092-1			ASME CLASS		
EN1092-1	Class 150	Class 300	Class 600	PN 10-40	PN 63	PN 100	Class 150	Class 300	Class 600
DN25	108 (4.25)	124 (4.88)	124 (4.88)	200 (7.87)	210 (8.27)	210 (8.27)	200 (7.87)	200 (7.87)	200 (7.87)
DN40	127 (5)	155.6 (6.13)	155.6 (6.13)	200 (7.87)	220 (8.66)	220 (8.66)	200 (7.87)	200 (7.87)	235 (9.25)
DN50	152.4 (6)	165 (6.5)	165 (6.5)	200 (7.87)	220 (8.66)	230 (9.06)	200 (7.87)	200 (7.87)	240 (9.45)
DN80	190.5 (7.5)	209.5 (8.25)	209.5 (8.25)	200 (7.87)	250 (9.84)	260 (10.24)	200 (7.87)	200 (7.87)	265 (10.43)
DN100	228.6 (9)	254 (10)	273.1 (10.75)	250 (9.84)	270 (10.63)	300 (11.81)	250 (9.84)	250 (9.84)	315 (12.4)
DN150	279.4 (11)	317.5 (12.5)	355.6 (14)	300 (11.81)	330 (12.99)	370 (14.57)	300 (11.81)	300 (11.81)	365 (14.37)
DN200	343 (13.5)	381 (15)	419.1 (16.5)	350 (13.78)	370 (14.57)		350 (13.78)	370 (14.57)	415 (16.34)
DN250	406.4 (16)	444.5 (17.5)	508 (20)	450 (17.72)	450 (17.72)		450 (17.72)	450 (17.72)	470 (18.5)
DN300	482 (19)	520.7 (20.5)	558.8 (22)	500 (19.69)	500 (19.69)		500 (19.69)	500 (19.69)	580 (22.83)

Dimensions (approximate) in mm (inches)

Wafer type connection

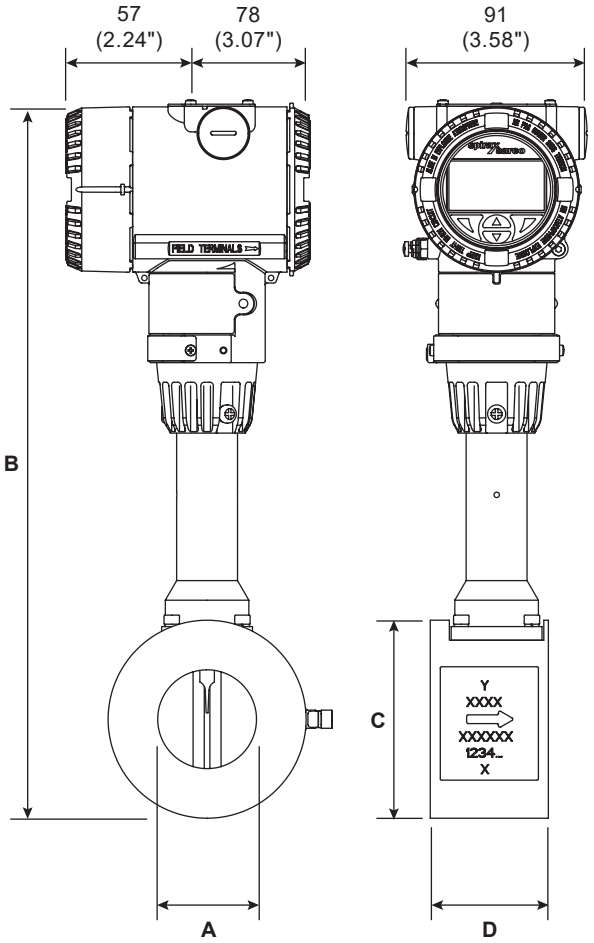

	A		B	
	EN1092-1 PN16/40/63	**ASME 150/300**	**EN1092-1 PN16/40/63**	**ASME 150/300**
DN25	28.5 (1.12)	28.5 (1.12)	320 (12.60)	330 (12.99)
DN40	43 (1.69)	43 (1.69)	336 (13.23)	336 (13.23)
DN50	54.4 (2.14)	54.4 (2.14)	344 (13.15)	342 (13.46)
DN80	82.4 (3.24)	82.4 (3.24)	358 (14.09)	358 (14.09)
DN100	106.8 (4.20)	106.8 (4.20)	366 (13.23)	371 (14.61)
DN150	159.3 (6.27)	159.3 (6.27)	398 (15.67)	398 (15.67)

	C		D	
	EN1092-1 PN16/40/63	**ASME 150/300**	**EN1092-1 PN16/40/63**	**ASME 150/300**
DN25	73 (2.87)	70.5 (2.78)	65 (2.56)	112.5 (4.43)
DN40	94 (3.70)	89.5 (3.52)	65 (2.56)	113 (4.45)
DN50	109 (4.29)	106.5 (4.19)	65 (2.56)	112.5 (4.43)
DN80	144 (5.67)	138.5 (5.45)	65 (2.56)	111 (4.37)
DN100	164 (6.46)	176.5 (6.95)	65 (2.56)	116 (4.57)
DN150	220 (8.66)	222.2 (8.75)	65 (2.56)	137 (5.39)

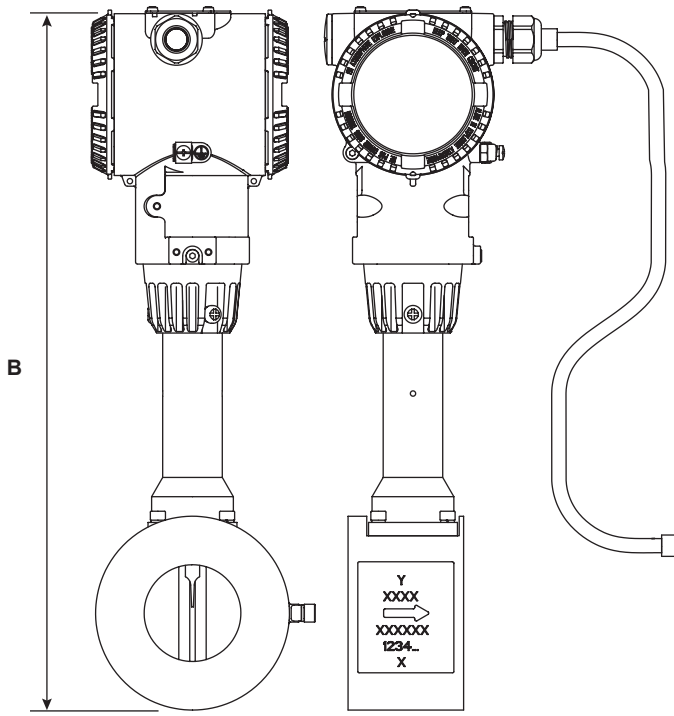

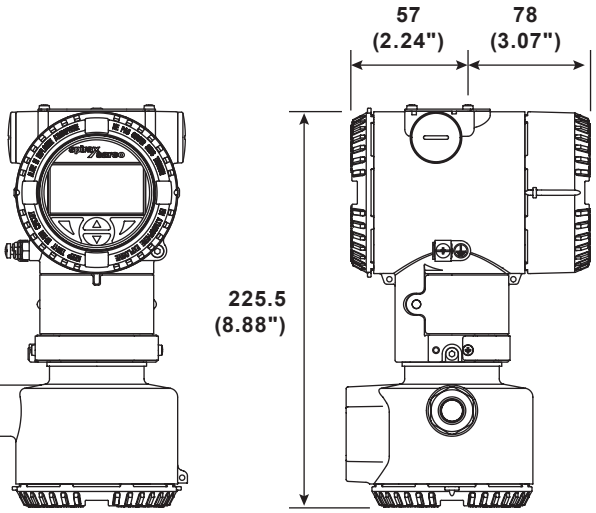

Remote electronics option

Weights (approx) in kg (lbs)

EN1092-1		Wafer models		Flanged models								
		PN40/63	Class 150/300	PN10/16	PN25/40	PN63	PN100	PN160	ASME 150	ASME 300	ASME 600	ASME 900
DN15	½"			4.5 (9.9)	4.5 (9.9)	5.4 (11.9)	5.4 (11.9)	5.4 (11.9)	5.0 (11)	5.1 (11.2)	5.2 (11.5)	7.9 (17.4)
DN25	1"	4.1 (9)	5.1 (11.2)	5.1 (11.2)	5.1 (11.2)	7.8 (17.2)	7.8 (17.2)		5.7 (12.6)	6.7 (14.8)	7.3 (16.1)	
DN40	1½"	4.8 (10.6)	6.1 (13.4)	6.6 (14.6)	6.6 (14.6)	10.1 (22.3)	10.1 (22.3)		8.5 (18.7)	10.9 (24)	12.1 (26.7)	
DN50	2"	5.6 (12.3)	8.4 (18.5)	8.7 (19.2)	8.7 (19.2)	12.2 (26.9)	15.1 (33.3)		10.1 (22.3)	11.7 (25.8)	13.6 (30)	
DN80	3"	7.6 (16.8)	11.2 (24.7)	13.1 (28.9)	13.1 (28.9)	17 (37.5)	21.4 (47.6)		17.6 (38.8)	21.7 (47.8)	25.8 (56.9)	
DN100	4"	8.5 (18.7)	17.2 (37.9)	14 (30.86)	17.8 (39.2)	24.1 (53.1)	32.2 (71)		20.1 (44.3)	28.8 (63.5)	41.4 (91.3)	
DN150	6"	13 (28.7)	25.7 (56.7)	25.4 (56)	33.6 (74.1)	53.8 (118.6)	70.4 (155.2)		32.8 (72.3)	49.8 (109.8)	81.6 (179.9)	
DN200	8"			45.3 (99.9)	66.3 (146.2)	93.1 (205.3)			51 (112.4)	77 (169.8)	106 (233.7)	
DN250	10"			67.4 (148.6)	106.4 (234.6)	135.6 (298.9)			77 (169.8)	106 (233.7)	156 (343.9)	
DN300	12"			77.2 (170.2)	123.2 (271.6)	170.6 (376.1)			95 (209)	143 (315.3)	196 (432.1)	

For remote electronics add 4.4 kg (9.7 lbs)

Water flowrates

Size			m^3/hr		US GPM	
			Minimum	Maximum	Minimum	Maximum
Nominal pipe size	**15 mm**	½"	0.5	7	2.2	31
	25 mm	1"	0.5	15	2.2	67
	40 mm	1 ½"	1.3	38	5.5	165
	50 mm	2"	2.1	63	9.2	276
	80 mm	3"	4.7	140	21	618
	100 mm	4"	8.1	244	36	1 075
	150 mm	6"	18	554	81	2 437
	200 mm	8"	32	970	142	4 270
	250 mm	10"	53	1 586	233	6 981
Stainless steel	**300 mm**	12"	77	2 303	338	10 139

Sizing considerations

	Straight run piping requirements [4]	Inlet Section	Outlet Section
Piping conditions	Straight pipe section	minimum 15 × DN	minimum 5 × DN
	Valve upstream of the meter tube	minimum 50 × DN	minimum 5 × DN
	Pipe reduction	minimum 15 × DN	minimum 5 × DN
	Pipe extension	minimum 18 × DN	minimum 5 × DN
	D = Internal diameter of the pipe - If there is not a sufficient straight run of pipe, a flow rectifier may be used to reduce the above diameter measurements. Consult your local Spirax Sarco representative or the factory for your specific application.		

[4] Check IM-P736-04 for full installation guidance.

How to order

Selection:

Category	Description	Suffix Code	Example
Base Model	In-line multivariable mass vortex flowmeter	VLM30-S	VLM30-S
	In-line multivariable mass vortex flowmeter with integrated binary output, temperature compensation, and flow computer functionality.	VLM30-E	
Explosion Protection Certification	None (Safe area)	Y0	Y0
System Design	Integral single sensor.	C1	C1
	Remote single sensor - 5 m (16 ft) signal cable supplied.	R1	
Process connection type	Wafer/DN25 (1")/DN25 (1")	W025R0	F050R0
	Wafer/DN40 (1½")/DN40 (1½")	W040R0	
	Wafer/DN50 (2")/DN50 (2")	W050R0	
	Wafer/DN80 (3")/DN80 (3")	W080R0	
	Wafer/DN100 (4")/DN100 (4")	W100R0	
	Wafer/DN150 (6")/DN150 (6")	W150R0	
	Flange/DN15 (½") / DN15 (½")	F015R0	
	Flange/DN25 (1")/DN25 (1")	F025R0	
	Flange/DN40 (1½")/DN40 (1½")	F040R0	
	Flange/DN50 (2")/DN50 (2")	F050R0	
	Flange/DN80 (3")/DN80 (3")	F080R0	
	Flange/DN100 (4")/DN100 (4")	F100R0	
	Flange/DN150 (6")/DN150 (6")	F150R0	
	Flange/DN200 (8")/DN200 (8") *	F200R0	
	Flange/DN250 (10")/DN250 (10") *	F250R0	
	Flange/DN300 (12")/DN300 (12") *	F300R0	

* Note this size is not available for EC1935 compliant products.

'How to order' continued on next page

How to order (continued)

Selection:

Category	Description	Suffix Code	Example
Pressure range [5]	PN10	D1	**D4**
	PN16	D2	
	PN25	D3	
	PN40	D4	
	PN63	D5	
	PN100	D6	
	ASME Class 150	A1	
	ASME Class 300	A3	
	ASME Class 600	A6	
Temperature Range of Measuring Medium	Standard -55 °C to +280 °C (-67 °F to +536 °F) [6]	A1	**A1**
Housing Material/ Cable gland threads	Aluminium/M20 x 1.5 (2 Places)	A1	**A1**
	Aluminium/½" NPT (2 Places)	B1	
Output Signal	HART Digital Communication and 4 to 20 mA	H1	**H1**
	HART Digital Communication, 4 to 20 mA and digital contact output	H5	
	MODBUS Communication with digital contact output	M4	
Integrated digital display (LCD)	Display and Glass cover	L1	**L1**
Piezo sensor sealing material	PTFE - Suitable for -55 °C to +260 °C (-67 °F to +500 °F)	SP0	**SP0**
	Graphite - Suitable for -55 °C to 350 °C (-67 °F to 662 °F)	SP2	

Notes:

[5] PN160/ASME Class 900 available on application. Please request if required.

[6] High Temperature Version expected Q4 2024.

'How to order' continued on next page

How to order (continued)

Selection:

Category	Description	Suffix Code	Example
Ambient temperature range	Extended -40 °C to +85 °C (-40 °F to 185 °F)	TA4	
Signal cable length (Remote sensor models only)	10m (32 ft Approx)	SC2	
	20m (64 ft Approx)	SC4	
	30m (96 ft Approx)	SC6	
Calibration type	5 Point Calibration	R5	
Certification	Material monitoring with inspection cert. 3.1 Acc. to EN 10204.	C2	**C2**
	Declaration of compliance with the order 3.1 Acc. to EN 10204	C4	
	Inspection cert. 3.1 Acc to EN 10204 of postive material identification PMI with material analysis	C5	
	Inspection cert. 3.1 Acc to EN 10204 of visual, dimensional and functional test.	C6	
	Inspection cert. 3.1 Acc to EN 10204 of positive material indentification and PMI	CA	
	Pressure test Acc. To factory plan	CB	
	Declaration of Compliance for EC1935 [9]	CF	
	Material monitoring to NACE MR 01-75 with inspection cert. 3.1 ACC. to EN 10204 [7]	CN	
	Test package (pressure test, non-destructive test, welder and welding procedure cert)	CT	
Documentation language	English	M5	**M5**
Configuration/Setup	Basic setup for steam	NCS	**NC1**
	Full application factory set up	NCC	
	Standard setup for water	NC1	
Hardware options	Integral RTD [8]	G1	**G1**
Operation mode	Energy Flow (Only available for VLM30-S with Modbus output)	N1	**N1**

Notes:

[7] CN is not available when C2 is selected.
[8] Integral RTD - Option 'G1' is standard for all VLM30 versions.
[9] Food+ : EC1935.2004 Product size range DN50 - DN150.

How to order example:

1 off Spirax Sarco VLM30-S.Y0.C1.F050R0.D4.A1.A1.H1.L1.SP0.C2.M5.NC1.G1.N1 in-line vortex flowmeter for installation between EN 1092 PN40 flanges with energy measurement function.