Local regulations may restrict the use of this product to below the conditions quoted.
In the interests of development and improvement of the product, we reserve the right to change the specification without notice. © Copyright 2025

Steri-trol Aseptic Service 'S' series Two-port Pneumatic Control Valves - DN15 (½") to DN100 (4")

Description

Steri-trol 'S' series are two-port control valves manufactured using 316L stainless steel. They are designed for modulating control of clean steam, pure steam and process fluids. The valve is operated by a pneumatic actuator and may be interfaced with a control system using any of the Spirax Sarco range of positioners.

Available types

SB	Two-port angle pattern design with aseptic steam sanitized bonnet
SA	Two port angle pattern design (for chemical free steam)

Valve characteristics - options:

SBE **SAE**	**Equal percentage (E) -** Suitable for most modulating process control applications good control providing at low flowrates.
SBL **SAL**	**Linear (L) -** Primarily for liquid flow control where the differential pressure across the valve is constant.

Approvals and certification

Compliant to ASME BPE SF4 2019, internal surface finish 0.375 µm, FDA, and USP 26 Class VI approved sealing materials.
EN 10204 type 3.1 certificates supplied as standard. Surface finish certificate supplied as standard.

Valve seating - options

S	**Metal-to-metal (as standard) -** Stainless steel
V	**Soft seal -** White Viton to provide a tight shut-off

Valve stem sealing - options

V	**White Viton -** USP 26 Class VI approved

The Steri-trol can be used with the following actuators

Pneumatic	PNS3000, PNS4000, PN9000E and PN9000R series

Refer to the relevant actuator Technical Information sheet for further details.

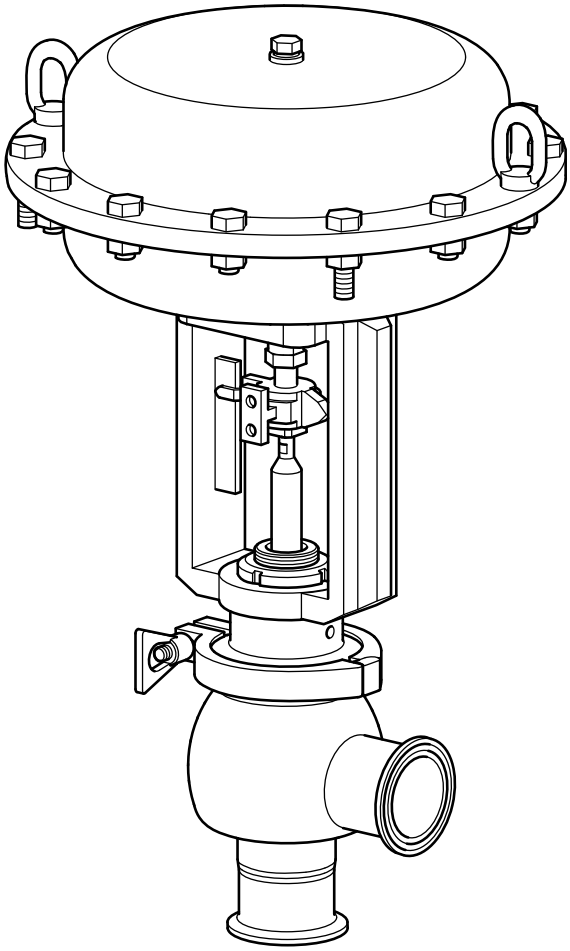

Technical data

Plug design	DN15 to DN100 (½" to 4")	Parabolic
Leakage	Metal-to-metal	(0.01% of Kv)
	Soft seal	IEC 534-4 Class VI
Rangeability	Equal percentage	50:1
	Linear	30:1
Travel	DN15 to DN50 (½" to 2")	20 mm (0.79 in)
	DN65 to DN100 (2½" to 4")	30 mm (1.2 in)
Surface finish	Internal (Mechanical or electro polished)	< 0.375 µ m
	External	< 0.6 µ m

Sizes and end connections

Connections	Size range
Butt weld/tube weld, screwed, flanged and sanitary clamp	DN15, DN20, DN25, DN32, DN40, DN50, DN65, DN80 and DN100
	½", ¾", 1", 1¼", 1½", 2", 2½", 3" and 4"

Notes:

- DN15, DN20 and DN32 is not available for certain end connections - see page 13.
- If you require a pipe end connection which has not been mentioned within this document, please contact Spirax Sarco sales office for further advice and information regarding availability.

Materials

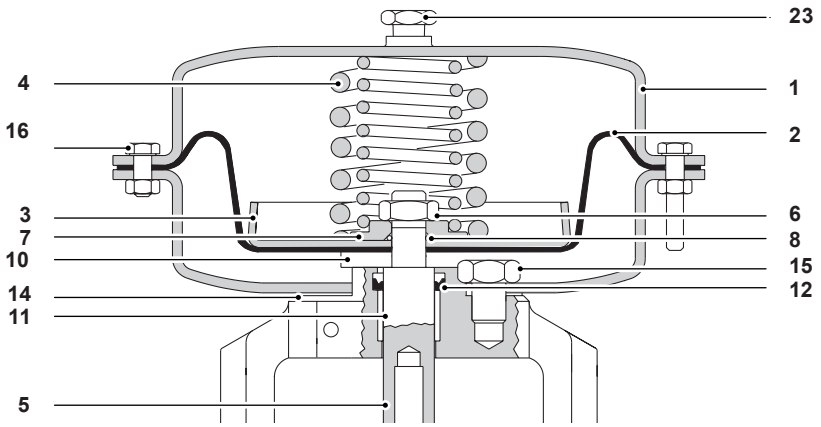

PNS3000 series

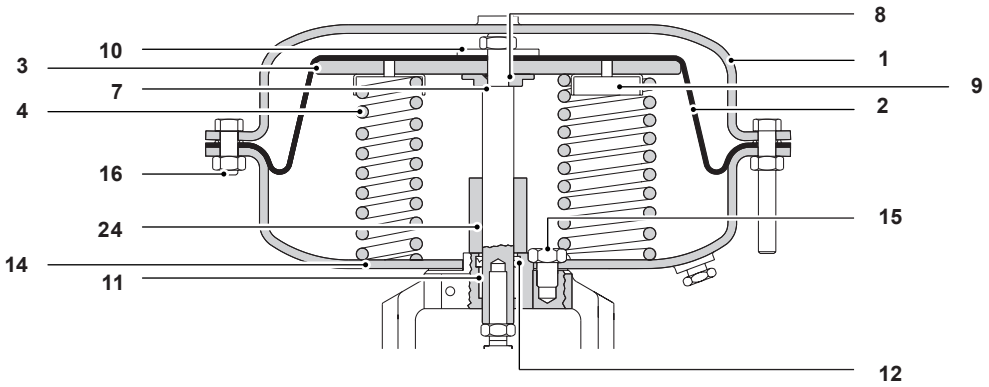

PNS4000 series

PNS3000 and PNS4000 series actuators

No.	Part	Material
1	Diaphragm housing	Stainless steel 304
2	Diaphragm	Reinforced nitrile rubber
3	Diaphragm plate	Pressed steel
4	Springs	Spring steel
5	Spindle	Stainless steel
6	Lock-nut	Stainless steel
7	Spacer	Zinc plated steel
8	'O' ring	Rubber
9	Spring guide	Zinc plated steel
10	Diaphragm clamp	Zinc plated steel
11	Bearing	Bronze
12	'V' ring	Rubber

No.	Part	Material
13	Yoke	Stainless steel 304
14	Gasket	Non asbestos fibre
15	Fixing screwed	Stainless steel
16	Housing bolts and nuts	Stainless steel
17	Top adaptor	Stainless steel
18	Lock-nut	Stainless steel
19	Bottom adaptor	Stainless steel
20	Connectors	Stainless steel
21	Connectors bolts and nuts	Stainless steel
22	Travel indicator	Aluminium
23	Cap (with vent hole)	Nickel plated brass
24	Spacer	Zinc plated steel

Materials (continued)

PN9000

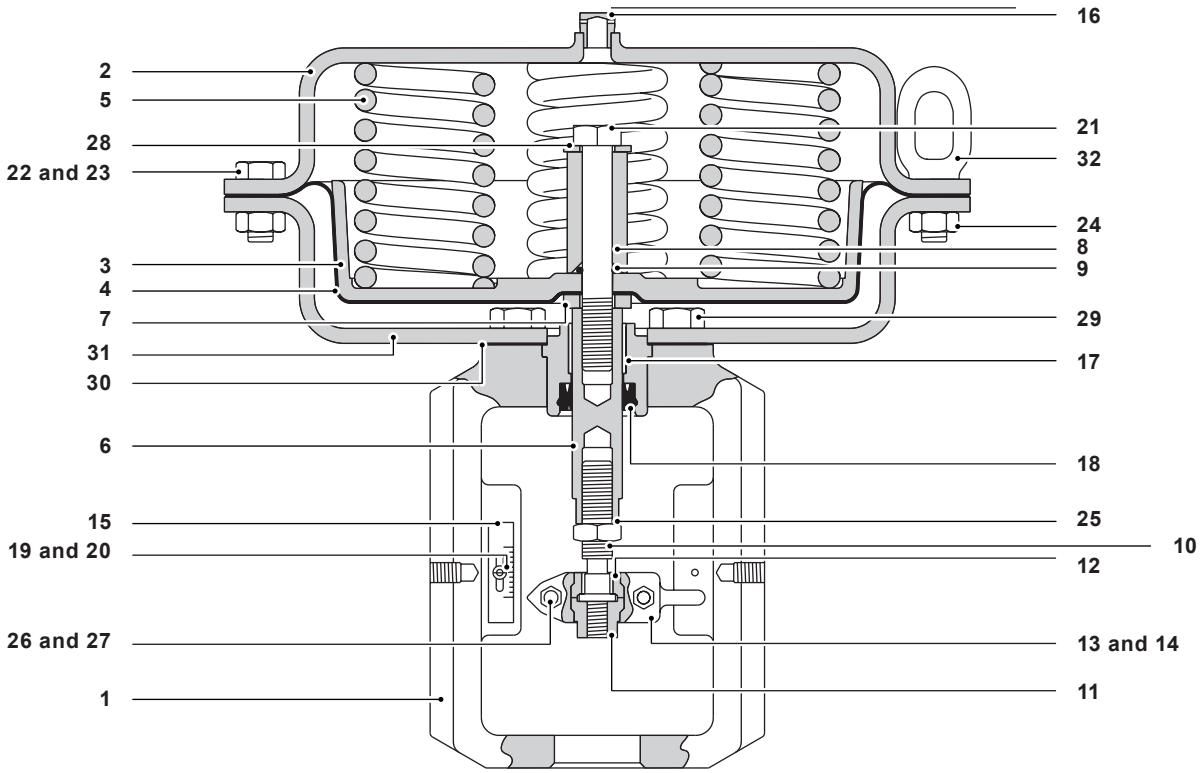

PN 9000 series actuators

No.	Part	Material	
1	Yoke	SG iron	
2	Upper diaphragm housing	Carbon steel (plated)	
3	Diaphragm plate	Aluminium	
4	Diaphragm	Reinforced NBR	
5	Spring	Spring steel	
6	Spindle	Stainless steel	
7	Washer	Carbon steel (plated)	
8	Spacer	Carbon steel (plated)	
9	'O' ring	Viton	
10	Connector	Carbon steel (plated)	
11	Adaptor	Carbon steel (plated)	
12	Collar	Carbon steel (plated)	
13	Clamp front	Stainless steel	
14	Clamp rear	Stainless steel	
15	Scale	Stainless steel	
16	Vent plug	Brass	
17	Bearing	PTFE/steel composite	
18	Seal	Polyurethane	
19	Pan head screw	Carbon steel (plated)	
20	Nyloc nut	Carbon steel (plated)	
21	Bolt	Carbon steel (plated)	Gr. 8.8
22	Hex. head screw (short)	Carbon steel (plated)	Gr. 8.8
23	Hex. head screw (long)	Carbon steel (plated)	Gr. 8.8
24	Nut	Carbon steel (plated)	Gr. 8.8
25	Lock-nut	Carbon steel (plated)	
26	Socket head screw	Carbon steel (plated)	Gr. 8.8
27	Nut	Carbon steel (plated)	Gr. 8.8
28	Washer	Carbon steel (plated)	
29	Screw	Carbon steel (plated)	Gr. 8.8
30	Gasket	Reinforced graphite	
31	Lower diaphragm housing	Carbon steel (plated)	
32	Lifting eye	Cast steel	

Materials (continued)

SA and SB control valves

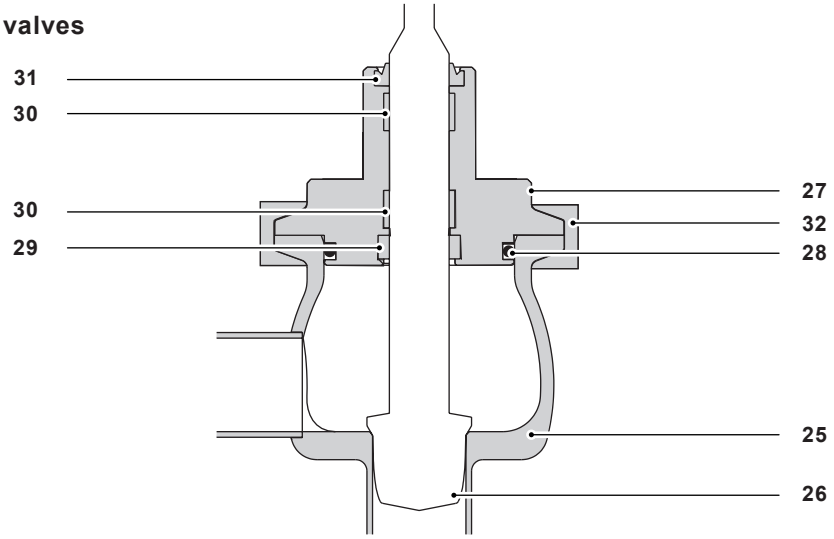

SA 2-port control valve

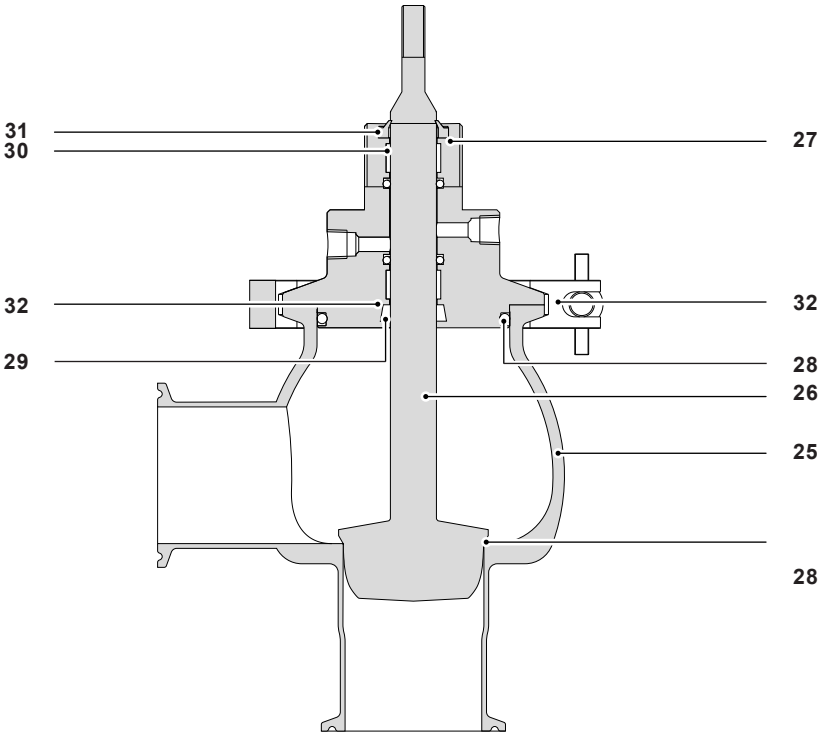

SB 2-Port control valve with aseptic steam sanitized bonnet (Provided as standard)

No.	Part	Material
25	Body	Stainless steel ASTM A479-316L
26	Valve plug, stem and soft seal	Stainless steel ASTM A479-316L
		Stainless steel 316L
27	Bonnet	Stainless steel ASTM A479-316L
28	Body seal	Viton (FKM)

No.	Part	Material
29	Stem seal	Viton (FKM)
30	Stem bushes	PTFE-FC
31	Seal washer	White Viton or EPDM
32	Body clamp	Stainless steel 304

Pressure/temperature limits

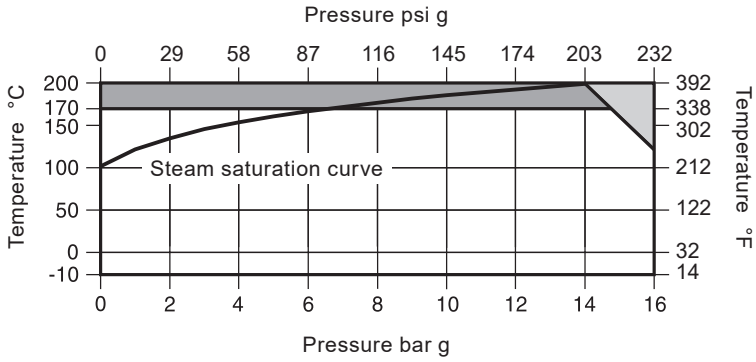

The product **must not** be used in this region.

Viton (V) stem seals must be selected for use in this region.

Body design conditions			PN16
Maximum design pressure		16 bar g @ 120 °C	232 psi g @248 °F
Maximum design temperature		200 °C @ 14 bar g	392 °F @ 203 psi g
Minimum design temperature		-20 °C	-4 °F
Maximum operating temperature	Viton (FKM) (V)	170 °C	338 °F
Minimum operating temperature **Note:** For lower operating temperatures consult Spirax Sarco.		-10 °C	14 °F
Maximum differential pressure			See pages 7 to 9
Designed for a maximum cold hydraulic test pressure of:		24 bar g	348 psi g

Kv values (SB and SA models)

Flow characteristic	**Valve size**	**K_v by valve size and trim reduction**								
		DN15 (½")	**DN20 (¾")**	**DN25 (1")**	**DN32 (1¼")**	**DN40 (1½")**	**DN50 (2")**	**DN65 (2½")**	**DN80 (3")**	**DN100 (4")**
	Travel	**20 mm (0.79")**						**30 mm (1.2")**		
Equal percentage and linear	**Standard**	4	6.3	10	16	25	36	63	100	160
	Reduction 1	-	4	6.3	10	16	25	36	63	100
	Reduction 2	-	-	4	6.3	10	16	25	36	63
	Reduction 3	-	-	-	4	6.3	10	16	25	36

Micro-flow trim for all valves ≤ DN25 (1")

Micro-flow trim	**Travel**	**20 mm (0.79")**				
	Trim size	⅛" (3.2 mm)	3⁄16" (4.8 mm)	¼" (6.4 mm)	¼" (6.4 mm)	⅜" (9.5 mm)
Linear characteristic	Kv	0.4	0.63	1.0	1.6	2.5

For conversion:
Kv = Cv (US) x 0.855
Cv(UK) = Cv (US) x 0.833

Maximum differential pressures for Class IV shut-off SB and SA valves

PNS3000 spring-to-extend actuators

Valve size			DN15 (½")	DN20 (¾")	DN25 (1")	DN32 (1¼")	DN40 (1½")	DN50 (2")	DN65 (2½")	DN80 (3")	DN100 (4")
Kv			4.0	6.3	10	16	25	36	63	100	160
Travel mm			20 mm (0.79")						30 mm (1.2")		
Actuator	Spring range	Positioner required	Maximum differential pressure Class IV bar (psi)								
PNS3220	0.2 - 1.0	Optional	8.3 (120)	4.1 (59)	1.4 (20)						
	0.4 - 1.2	Optional	16.0 (232)	14.0 (203)	7.1 (103)	4.0 (58.0)	2.4 (34.8)				
PNS3320	0.2 - 1.0	Optional			16.0 (232)						
	0.4 - 1.2	Optional				11.4 (165)	7.6 (110)	3.8 (55.1)			
PNS3326	1.0 - 3.0	Yes			12.8 (186)	16.0 (232)	16.0 (232)	12.7 (184)			
PNS3420	0.2 - 1.0	Optional			16.0 (232)	7.7 (112)	5.0 (72.5)	2.3 (33.4)			
	0.4 - 1.2	Optional				16.0 (232)	12.8 (186)	6.8 (98.6)			
PNS3426	1.0 - 3.0	Yes					16.0 (232)	16.0 (232)			
PNS3430	0.4 - 1.2	Optional							3.4 (49.3)	2.0 (29.0)	1.2 (17.4)
PNS3436	1.0 - 3.0	Yes							10.7 (155)	6.9 (100)	4.6 (66.7)

Maximum differential pressures for Class IV shut-off SB and SA valves (continued)

PN9000 spring-to-extend actuators

Valve size			DN15 (½")	DN20 (¾")	DN25 (1")	DN32 (1¼")	DN40 (1½")	DN50 (2")	DN65 (2½")	DN80 (3")	DN100 (4")
Kv			4.0	6.3	10	16	25	36	63	100	160
Travel mm			20 mm (0.79")						30 mm (1.2")		
Actuator	Spring range	Positioner required	Maximum differential pressure Class IV bar (psi)								
PN9120E	0.4 - 1.2	Optional	14.0 (203)	8.0 (116)	4.0 (58.0)	2.0 (29.0)	1.0 (14.5)	-			
PN9126E	1.0 - 2.0	Yes	16.0 (232)	16.0 (232)	15.0 (218)	9.0 (131)	6.0 (87.0)	3.0 (43.5)			
PN9123E	2.0 - 4.0	Yes			16.0 (232)	16.0 (232)	15.0 (218)	8.0 (116)			
PN9220E	0.2 - 1.0	Optional			10.0 (145)	6.0 (87.0)	3.0 (43.5)	1.0 (14.5)			
	0.4 - 1.2	Optional			16.0 (232)	15.0 (218)	10.0 (145)	5.0 (72.5)			
PN9226E	1.0 - 2.0	Yes				16.0 (232)	16.0 (232)	16.0 (232)			
PN9223E	2.0 - 4.0	Yes									
PN9320E	0.2 - 1.0	Optional				14.0 (203)	10.0 (145)	5.0 (72.5)			
	0.4 - 1.2	Optional				16.0 (232)	16.0 (232)	12.0 (174)			
PN9330E	0.4 - 1.2	Yes							6.0 (87.0)	4.0 (58.0)	3.0 (43.5)
PN9336E	1.0 - 2.0	Yes							16.0 (232)	12.0 (174)	8.0 (116)
PN9337E	2.5 - 3.5	Yes								16.0 (232)	16.0 (232)

Maximum differential pressures for Class IV shut-off SB and SA valves

PNS4000 spring-to-retract actuators

Valve size				DN15 (½")	DN20 (¾")	DN25 (1")	DN32 (1¼")	DN40 (1½")	DN50 (2")	DN65 (2½")	DN80 (3")	DN100 (4")
Kv				4.0	6.3	10	16	25	36	63	100	160
Travel mm				20 mm (0.79")						30 mm (1.2")		
Actuator	Spring range	Positioner required	Minimum air pressure	Maximum differential pressure Class IV bar (psi)								
PNS4220	0.2 - 1.0	Optional	1.4	16.0 (232)	14.0 (203)	7.1 (203)	4.0 (103)	2.4 (34.8)				
	0.2 - 1.0	Yes	2.0		16.0 (232)	16.0 (232)	15.1 (219)	10.2 (148)	5.3 (76.9)			
	0.2 - 1.0	Yes	3.0				16.0 (232)	16.0 (232)	12.7 (184)			
	0.2 - 1.0	Yes	4.0						16.0 (232)			
PNS4320	0.2 - 1.0	Optional	1.4				11.4 (165)	7.6 (110)	3.8 (55.1)			
	0.2 - 1.0	Yes	2.0				16.0 (232)	16.0 (232)	12.7 (184)			
	0.2 - 1.0	Yes	3.0						16.0 (232)			
PNS4420	0.2 - 1.0	Optional	1.4						6.8 (98.6)			
	0.2 - 1.0	Yes	2.0						16.0 (232)			
	0.2 - 1.0	Yes	3.0									
PNS4430	0.2 - 1.0	Optional	1.4							3.4 (49.3)	2.0 (29.0)	1.2 (17.4)
	0.2 - 1.0	Yes	2.0							10.7 (155)	6.9 (100)	4.6 (66.7)
	0.2 - 1.0	Yes	3.0							16.0 (232)	15.0 (218)	10.2 (148)
	0.2 - 1.0	Yes	4.0								16.0 (232)	15.8 229)

Maximum differential pressures for Class IV shut-off SB and SA valves (continued)

PN9000 spring-to-retract actuators

Valve size			DN15 (½")	DN20 (¾")	DN25 (1")	DN32 (1¼")	DN40 (1½")	DN50 (2")	DN65 (2½")	DN80 (3")	DN100 (4")
Kv			4.0	6.3	10	16	25	36	63	100	160
Travel mm			20 mm (0.79")						30 mm (1.2")		
Actuator	Spring range	Positioner required	Maximum differential pressure Class IV bar (psi)								
PN9120R	0.2 - 1.0	Optional	16.0 (232)	16.0 (232)	16.0 (232)	16.0 (232)	16.0 (232)	16.0 (232)			
	0.4 - 1.2	Optional									
PN9126R	1.0 - 2.0	Yes									
PN9123R	2.0 - 4.0	Yes						8.0 (116)			
PN9220R	0.2 - 1.0	Optional						16.0 (232)			
	0.4 - 1.2	Optional									
PN9226R	1.0 - 2.0	Yes									
PN9223R	2.0 - 4.0	Yes									
PN9320R	0.2 - 1.0	Optional									
	0.4 - 1.2	Optional									
PN9330R	0.4 - 1.2	Yes							16.0 (232)	16.0 (232)	16.0 (232)
PN9336R	1.0 - 2.0	Yes									
PN9337R	2.5 - 3.5	Yes							8.0 (116)	5.0 (72.5)	3.0 (43.5)

Maximum differential pressures for Class VI shut-off (soft seat seal only) SB and SA valves

PNS3000 spring-to-extend actuators

Valve size			DN15 (½")	DN20 (¾")	DN25 (1")	DN32 (1¼")	DN40 (1½")	DN50 (2")	DN65 (2½")	DN80 (3")	DN100 (4")
K_V			4.0	6.3	10	16	25	36	63	100	160
Travel mm			20 mm (0.79")						30 mm (1.2")		
Actuator	Spring range	Positioner required	Maximum differential pressure Class IV bar (psi)								
PNS3220	0.4 - 1.2	Optional	12.1 (175)	8.4 (122)	3.0 (43.5)	2.3 (33.4)	1.3 (18.9)	-	-	-	-
PNS3320	0.2 - 1.0	Optional						-	-	-	-
	0.4 - 1.2	Optional	16.0 (232)	16.0 (232)	9.1 (132)	7.4 (107)	5.1 (74.0)	2.3 (33.4)	-	-	-
PNS3326	1.0 - 3.0	Yes			16.0 (232)	16.0 (232)	16.0 (232)	8.4 (122)	-	-	-
PNS3420	0.2 - 1.0	Optional		14.9 (216)	6.0 (87.0)	4.8 (69.6)	3.2 (46.4)	1.3 (18.9)	-	-	-
	0.4 - 1.2	Optional		16.0 (232)	15.1 (219)	12.4 (180)	8.8 (128)	4.4 (63.8)	-	-	-
PNS3426	1.0 - 3.0	Yes	-	-	16.0 (232)	16.0 (232)	16.0 (232)	13.5 (196)	-	-	-
PNS3430	0.4 - 1.2	Optional	-	-	-	-	-	-	2.2 (31.9)	1.7 (24.7)	-
PNS3436	1.0 - 3.0	Yes	-	-	-	-	-	-	7.4 (107)	5.9 (85.6)	3.7 (53.7)

Maximum differential pressures for Class VI shut-off (soft seat seal only) SB and SA valves

PN9000 spring-to-extend actuators

Valve size			DN15 (½")	DN20 (¾")	DN25 (1")	DN32 (1¼")	DN40 (1½")	DN50 (2")	DN65 (2½")	DN80 (3")	DN100 (4")
Kv			4.0	6.3	10	16	25	36	63	100	160
Travel mm			20 mm (0.79")						30 mm (1.2")		
Actuator	Spring range	Positioner required	Maximum differential pressure Class IV bar (psi)								
PN9120E	0.4 - 1.2	Optional	7.0 (102)	4.0 (58.0)	1.0 (14.5)	1.0 (14.5)	-	-	-	-	-
PN9126E	1.0 - 2.0	Yes	16.0 (232)	16.0 (232)	7.0 (102)	6.0 (87.0)	4.0 (58.0)	2.0 (29.0)	-	-	-
PN9123E	2.0 - 4.0	Yes			16.0 (232)	15.0 (218)	10.0 (145)	5.0 (72.5)	-	-	-
PN9220E	0.2 - 1.0	Optional			4.0 (58.0)	3.0 (43.5)	2.0 (29.0)	1.0 (14.5)	-	-	-
	0.4 - 1.2	Optional			12.0 (174)	10.0 (145)	7.0 (102)	3.0 (43.5)	-	-	-
PN9226E	1.0 - 2.0	Yes			16.0 (232)	16.0 (232)	16.0 (232)	11.0 (160)	-	-	-
PN9223E	2.0 - 4.0	Yes						16.0 (232)	-	-	-
PN9320E	0.2 - 1.0	Optional			11.0 (160)	9.0 (131)	7.0 (102)	3.0 (43.5)	-	-	-
	0.4 - 1.2	Optional			16.0 (232)	16.0 (232)	15.0 (218)	8.0 (116)	-	-	-
PN9330E	0.4 - 1.2	Yes	-	-	-	-	-	-	4.0 (58.0)	3.0 (43.5)	2.0 (29.0)
PN9336E	1.0 - 2.0	Yes	-	-	-	-	-	-	13.0 (189)	10.0 (145)	6.0 (87.0)
PN9337E	2.5 - 3.5	Yes	-	-	-	-	-	-	16.0 (232)	16.0 (232)	16.0 (232)
PN9337E	2.5 - 3.5	Yes	-	-	-	-	-	-			

Maximum differential pressures for Class VI shut-off (soft seat seal only) SB and SA valves

PNS4000 spring-to-retract actuators

Valve size				DN15 (½")	DN20 (¾")	DN25 (1")	DN32 (1¼")	DN40 (1½")	DN50 (2")	DN65 (2½")	DN80 (3")	DN100 (4")
Kv				4.0	6.3	10	16	25	36	63	100	160
Travel mm				20 mm (0.79")						30 mm (1.2")		
Actuator	Spring range	Positioner required	Minimum air pressure	Maximum differential pressure Class IV bar (psi)								
PNS4220	0.2 - 1.0	Optional	1.4 (20.3)	12.1 (175)	8.4 (122)	3.0 (43.5)	2.3 (33.4)	1.3 (18.9)	-	-	-	-
	0.2 - 1.0	Yes	2.0 (29.0)	16.0 (232)	16.0 (232)	12.1 (175)	9.9 (144)	6.9 (100)	3.3 (47.9)	-	-	-
	0.2 - 1.0	Yes	3.0 (43.5)			16.0 (232)	16.0 (232)	16.0 (232)	8.4 (122)	-	-	-
	0.2 - 1.0	Yes	4.0 (58.0)						13.5 (196)	-	-	-
PNS4320	0.2 - 1.0	Optional	1.4 (20.3)			9.1 (132)	7.4 (107)	5.1 (74.0)	2.3 (33.4)	-	-	-
	0.2 - 1.0	Yes	2.0 (29.0)			16.0 (232)	16.0 (232)	16.0 (232)	8.4 (122)	-	-	-
	0.2 - 1.0	Yes	3.0 (43.5)						16.0 (232)	-	-	-
PNS4420	0.2 - 1.0	Optional	1.4 (20.3)	-	-	15.1 (219)	12.4 (180)	8.8 (128)	4.4 (63.8)	-	-	-
	0.2 - 1.0	Yes	2.0 (29.0)	-	-	16.0 (232)	16.0 (232)	16.0 (232)	13.5 (196)	-	-	-
	0.2 - 1.0	Yes	3.0 (43.5)	-	-				16.0 (232)	-	-	-
PNS4430	0.2 - 1.0	Optional	1.4 (20.3)	-	-	-	-	-	-	2.2 (31.9)	1.7 (24.7)	-
	0.2 - 1.0	Yes	2.0 (29.0)	-	-	-	-	-	-	7.4 (107)	5.9 (85.6)	3.7 (53.7)
	0.2 - 1.0	Yes	3.0 (43.5)	-	-	-	-	-	-	16.0 (232)	13.1 (190)	8.4 (122)
	0.2 - 1.0	Yes	4.0 (58.0)	-	-	-	-	-	-		16.0 (232)	13.1 (190)

Maximum differential pressures for Class VI shut-off (soft seat seal only) SB and SA valves

PN9000 spring-to-retract actuators

Valve size			DN15 (½")	DN20 (¾")	DN25 (1")	DN32 (1¼")	DN40 (1½")	DN50 (2")	DN65 (2½")	DN80 (3")	DN100 (4")
Kv			4.0	6.3	10	16	25	36	63	100	160
Travel mm			20 mm (0.79")						30 mm (1.2")		
Actuator	Spring range	Positioner required	Maximum differential pressure Class IV bar (psi)								
PN9120R	0.2 - 1.0	Optional	16.0 (232)	16.0 (232)	16.0 (232)	16.0 (232)	16.0 (232)	16.0 (232)	-	-	-
	0.4 - 1.2	Optional						15.0 (218)	-	-	-
PN9126R	1.0 - 2.0	Yes						12.0 (174)	-	-	-
PN9123R	2.0 - 4.0	Yes						5.0 (72.5)	-	-	-
PN9220R	0.2 - 1.0	Optional						16.0 (232)	-	-	-
	0.4 - 1.2	Optional							-	-	-
PN9226R	1.0 - 2.0	Yes							-	-	-
PN9223R	2.0 - 4.0	Yes							-	-	-
PN9320R	0.2 - 1.0	Optional							-	-	-
	0.4 - 1.2	Optional							-	-	-
PN9330R	0.4 - 1.2	Yes	-	-	-	-	-	-	16.0 (232)	16.0 (232)	16.0 (232)
PN9336R	1.0 - 2.0	Yes	-	-	-	-	-	-			14.0 (203)
PN9337R	2.5 - 3.5	Yes	-	-	-	-	-	-	6.0 (87.0)	4.0 (58.0)	3.0 (43.5)

Valve dimensions (approximate) in mm (inches)

Valve Size		Connection and Dimensions											
		Tube end				Threaded		Sanitary clamp		Dimensions common to all connections			
		A		B		A and B		A and B		C		D	
		mm	inches	mm	inches	mm	inches	mm	inches	mm	inches	mm	inches
DN15	½"	70	2.76	24	0.94	-		42.0	1.65	64	2.52	43	1.69
DN20	¾"			26	1.02	-		44.0	1.73				
DN25	1"			40	1.57	55	2.17	60.3	2.37	73	2.87	57	2.24
DN32	1¼"			43	1.69	66	2.60	64.5	25.4	75	2.95		
DN40	1½"			49	1.93	70	2.76	69.9	2.75	80	3.15		
DN50	2"	85	3.35	54	2.13	82	3.23	88.9	3.5	91	3.58	65	2.56
DN65	2½"	105	4.13	68	2.68	105	4.13			95	3.74	85	8.35
DN80	3"			83	3.27	110	4.33	95.3	3.75	121	4.76		
DN100	4"	130	5.12	96	3.78	150	5.91	114.3	232	133	5.24	97	3.82

Valve weights approximate in kg (lbs)

Valve size		Model SB, SA			
		Sanitary clamp and screwed		Tube end	
		kg	lbs	kg	lbs
DN15	½"	1.5	3.31	1.0	2.20
DN20	¾"				
DN25	1"	2.5	5.51	2.0	4.41
DN32	1¼"	3.0	6.61		
DN40	1½"			2.5	5.51
DN50	2"	4.0	8.82	3.0	6.61
DN65	2½"	6.5	14.3	5.5	12.1
DN80	3"	8.0	17.6	7.0	15.4
DN100	4"	11.0	24.3	10.0	22.0

Actuator dimensions and weights (approximate) in mm (inches) and kg (lbs)

Actuator type	F		G		Weight	
	mm	inches	mm	inches	kh	lbs
PNS3200 and PNS4200 series	209	8.23	240	9.45	7.2	15.9
PNS3300 and PNS4300 series	285	11.2	264	10.4	11.2	24.7
PNS3420 and PNS4420 series	336	13.2	263	10.4	20.0	44.1
PNS3430 and PNS4430 series			328	12.9		
PNS3530 series	405	15.9	367	14.4	22.6	49.8
PNS3630 series	465	18.3	400	15.7	38.0	83.8

Dimensions/weights (approximate) in mm (inches) and kg (lbs)

Actuator range	F		G		Weight	
	mm	inches	mm	inches	kg	lbs
PN9100E and variants	275	10.8	170	6.69	6	0.24
PN9100R and variants						
PN9200E and variants	300	11.8	300	11.8	17	0.67
PN9200R and variants						
PN9320E and variants	325	12.8	390	15.4	27	1.1
PN9320R and variants						
PN9330E and variants						
PN9330R and variants						

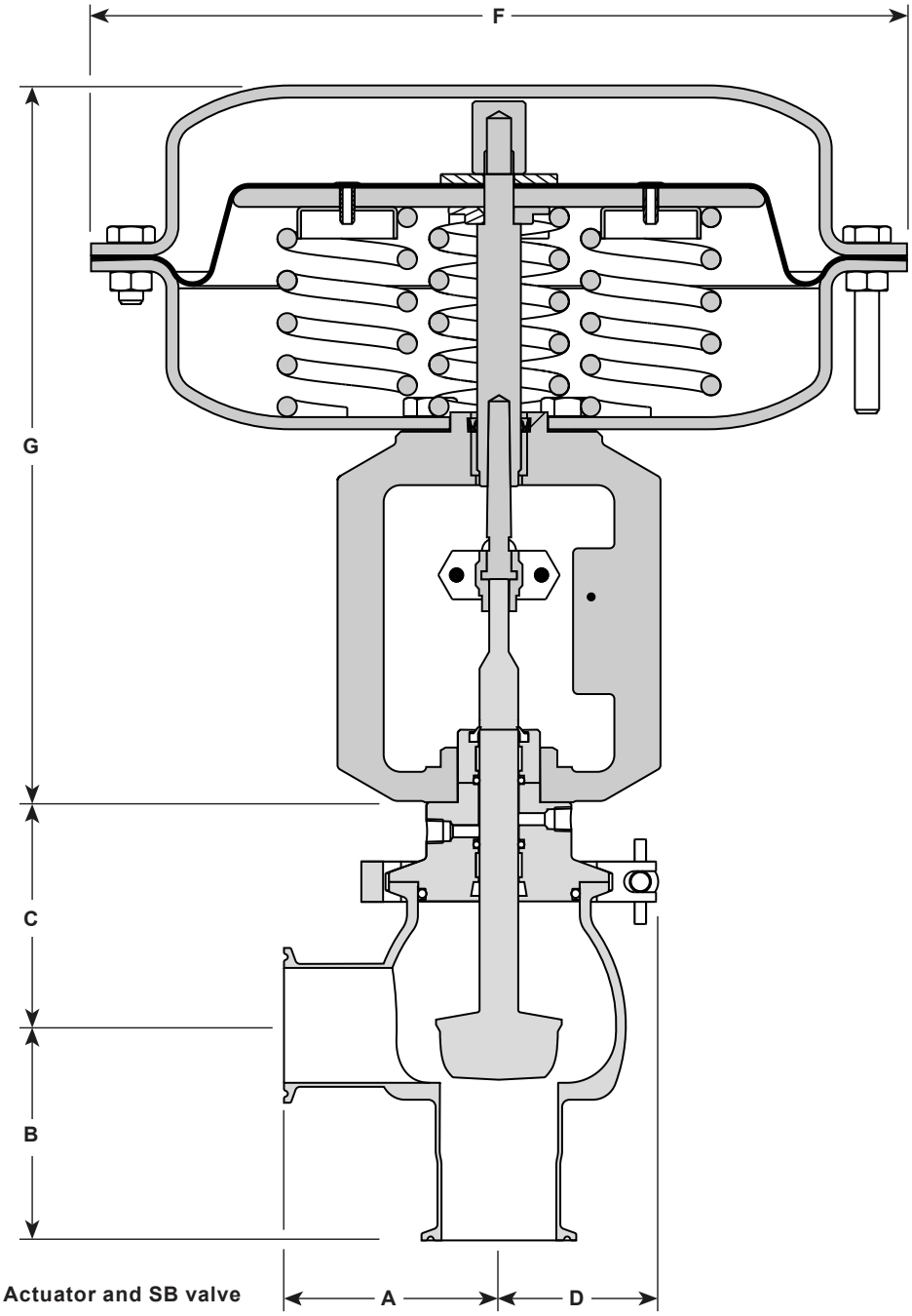

Connection codes

The codes specified below represent a small selection of pipe end connections that are available. If the connection required is not specified below please contact Spirax Sarco.
Note: All sizes are available for each connection/specification unless otherwise stated.

Connection		Specification	Code
Butt weld and Tube weld	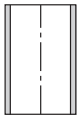	DIN 11850 (Series 2)	OO
		ASME BPE (Not available for size DN32)	OD
Sanitary clamp	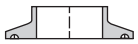	ASME BPE (Tri-clamp®) (Not available for size DN32)	AO
		DIN 32676 A	SO
		DIN 32676 B	BO
Aseptic-thread (fitted on pipe)	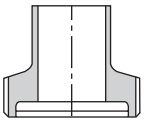	DIN 11864 T1 Form A	GS
		DIN 11864 TI Form B	GT
		DIN 11887 (11851)	GU
		SMS 1146 (Not available for the DN15 and DN20 (½" and ¾") sizes)	GV

How to order

Ordering a control valve

Valve size	DN15, DN20, DN25, DN32, DN40, DN50, DN65, DN80 and DN100 **Note:** DN15, DN20 and DN32 is not available for certain end connections - see page 13	**DN15**
Valve series	SB = Two-port angle pattern design with Aseptic Steam Sanitized Bonnet SA = Two-port angle pattern design	**SB**
Valve characteristic	E = Equal percentage L = Linear	**E**
Body material	6 = 316L stainless steel	**6**
Connection standard	To be specified - See page 13	**OO**
Seating option	S = Stainless steel	**S**
Stem and body sealing option	V = White Viton (FDA, USP 26 Class VI approved)	**V**
Internal surface finish	0 = Standard 0.375 µm mechanical polishing (ASME BPE SFV4)	**0**
Kv	To be specified	**4**

Ordering a PNS, PN or PNP pneumatic actuator

Type	**PNS pneumatic actuator**	PNS = Pneumatic stainless steel	**PN**
	PN or PNP pneumatic actuator	PN = Pneumatic epoxy coated PNP = Pneumatic electroless nickel plated (ENP)	
Series and action	**PNS pneumatic actuator**	3 = 3000 multi-spring (spring-to-extend) 4 = 4000 multi-spring (spring-to-retract)	**3**
	PN or PNP pneumatic actuator	9 = 9000 series	
Diaphragm area	**PNS pneumatic actuator**	2 = 310 cm² (48.1 in²) 3 = 490 cm² (76.0 in²) 4 = 710 cm² (110 in²)	**1**
	PN or PNP pneumatic actuator	1 = 100 cm² (15.5 in²) 2 = 340 cm² (52.7 in²) 3 = 670 cm² (104 in²)	
Travel	**PNS pneumatic actuator**	2 = 20mm (0.79") 3 = 30 mm (1.2")	**2**
	PN or PNP pneumatic actuator	2 = 20 mm (0.79") 3 = 30 mm (1.2")	
Spring range	**PNS pneumatic actuator**	0 = 0.2 to 1.0 bar (0.4 to 1.2 bar) (2.90 to 14.5 psi (5.80 to 17.4 psi)) 6 = 1.0 to 3.0 bar (14.5 to 43.5 psi)	**0**
	PN or PNP pneumatic actuator	0 = 0.2 to 1.0 bar (0.4 to 1.2 bar) (2.90 to 14.5 psi (5.80 to 17.4 psi)) 3 = 2.0 to 4.0 bar (29.0 to 58.0 psi) 6 = 1.0 to 2.0 bar (14.5 to 29.0 psi) 7 = 2.5 to 3.5 bar (36.3 to 50.8 psi)	
Travel		E = Spring to extend R = Spring to retract	**E**

Ordering example:

1 off Spirax Sarco Steri-trol type DN15 SBE6OOSV04 and 1 pneumatic actuator type PNS3320. Having a spring range of 0.4 to 1.2 bar.

Spare parts

The available spares are identified by the part numbers listed below. When placing an order for spare parts, always specify the actuator or the valve model (shown on the data plate) and the name of the part as described below.

Available spares for the SA and SB control valves and the PNS3000 and PNS4000 series actuators

	Description					Part number
Actuator	Stem seal kit	('O' ring and 'V' ring)				**8 and 12**
	Diaphragm kit	(diaphragm, 'O' ring and 'V' ring)				**2, 8 and 12**
	Travel indicator					**22**
	Spring kit	(set of springs, included 3 off longer hex, head bolts and nut on some spring range)				**4 and 16**
	Linkage kit	(lock-nut, top adaptor connectors, bolts and nuts)				**17, 18, 19, 20 and 21**
Valve	SA and SB models		Valve stem seal set	(excluding bonnet seal)		**29, 30 and 31**
			Bonnet seal	Viton	(packet of 3)	**28**
			Plug and stem	(Equal percentage or Linear)		**26**

Spare parts ordering example:

1 off Valve stem seal set for a Steri-trol DN15 SBE6OOSV04 two-port control valve.
1 off Stem seal kit for a type PNS3320 pneumatic actuator having a spring range 0.4 to 1.2 bar.

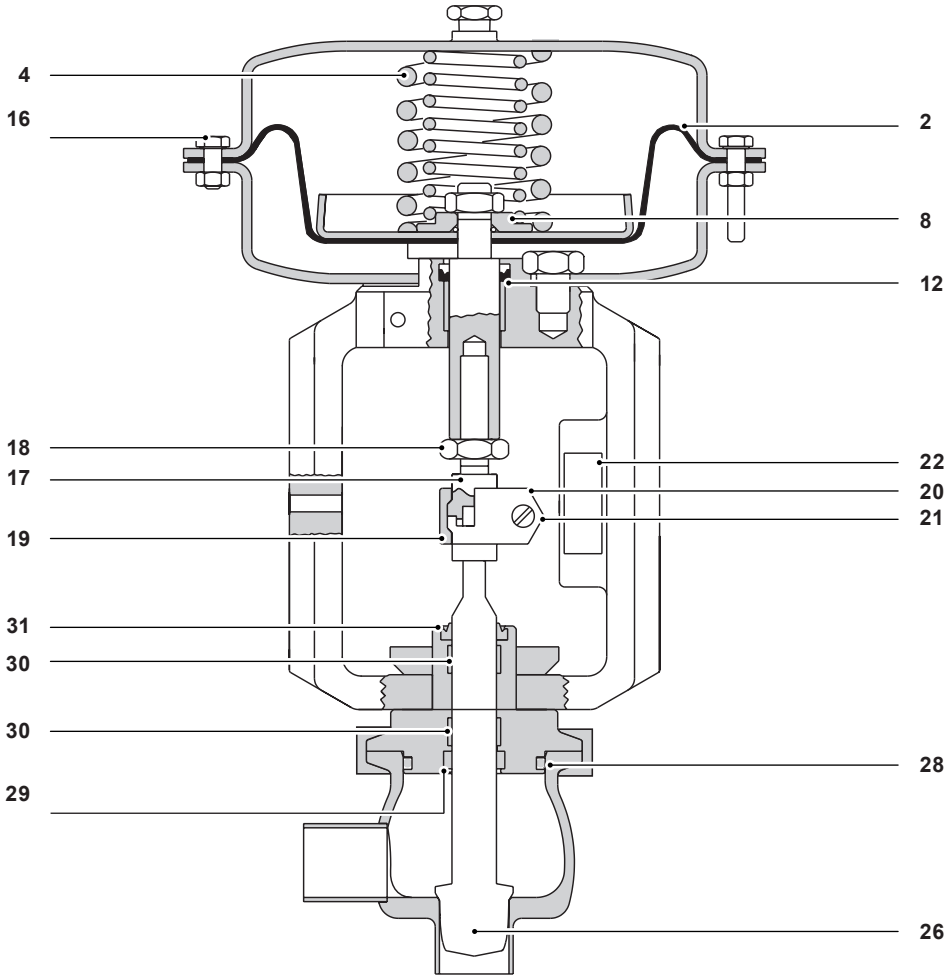

Actuator and SA valve

Note: For PN9000 actuator spares please refer to TI-P357-30