Local regulations may restrict the use of this product to below the conditions quoted.
In the interests of development and improvement of the product, we reserve the right to change the specification without notice. © Copyright 2026

SP7-20, SP7-21 and SP7-22 Smart Positioner

Description

The SP7-2* is an electronically configurable positioner with communication capabilities designed for mounting on pneumatic linear or rotary actuators. It features a small and compact design, a modular construction, and an excellent cost-performance ratio. Fully automatic determination of the control parameters and adaptation to the positioner allow for considerable time savings as well as optimum control behaviour.

The positioner has a local communication interface (LCI) as standard in the SP7-20. Additionally, a 'HART® communication' option for communication via the 20 mA signal is available. Both communications are based on the HART® Protocol. Alternatively, HART®5 or HART®7 are available.

Other available options are the SP7-21 with a PROFIBUS PA module or the SP7-22 with FOUNDATION Fieldbus module.
In addition to its input for the analog position set point, the positioner is equipped with a digital input which can be used to activate control system functions in the device. A digital output allows you to output collective messages (alarms/faults).

Throughout the document SP7-2* is written where the information is relevant to all versions; the SP7-20, SP7-21 and SP7-22. Where the information is specific it will be referenced as the version appropriate.

Air supply

The SP7-2* positioner must be provided with a high quality air supply to ISO 8573-1:2010 Class 3:3:3

Approvals

	ATEX rating	II 2 G Ex db IIC T4/T5/T6 Gb
	IECEx rating	Ex db IIC T4/T5/T6 Gb
	CCC (China)	Ex db IIC T4/T5/T6 Gb
	NEPSI rating	Ex db IIC T4/T5/T6 Gb
	INMETRO rating	Ex db IIC T6 ....T4 Gb

Applications

The SP7-2* can be used with any actuator that conforms to NAMUR, this includes all of the following Spirax Sarco pneumatic actuators:

BVA300 rotary
PN1600 series
PNS3000 and **PNS4000 series**
PN9000 series
TN2000 series

Materials

Part	Material	Finish
Case and cover	Die cast aluminium	Case - Anti-corrosive paint, Black
		Cover - Anti-corrosive paint to RAL9016
Mounting kits	Stainless steel	-
Follower pin cone	Nylon	-

Technical data

Input signal	4-20 mA (split range minimum amplitude 8 mA) or PROFIBUS PA or FOUNDATION Fieldbus	
Impedance	Max 485 +/- 15 Ω (for 4-20mA input signal only)	
Air supply	1.4 to 6.0 bar (20.3 to 87 psi g)	
Air quality	ISO 8573-1:2010 Class 3:3:3	
Output pressure	0 to 100% supply pressure	
Actuator stroke	20 mm to 150 mm or 55 ° to 90 ° (0.78 to 5.91 inches)	
Action	Single acting/fail vent/Double acting	
Operating temperature	−40 to 85 °C (0.78 to 5.91 inches)	
Air connections	¼" NPT female	
Deviation	≤ 0.5 %	
Tolerance band	0.3 to 10 %, adjustable	
Configurable dead zone	0.1 to 10 %, adjustable for 4-20 mA, HART and PROFIBUS PA, 0.1 to 5 % for FOUNDATION Fieldbus	
Resolution (AD-conversion)	> 16,000 steps	
Sampling frequency	20 ms (for 4-20mA input signal only).	
Ambient temperature effect	≤ 0.5 % per 10 K	
Reference temperature	20 °C (68 °F)	
Influence of vibration	≤ 1 % to 10 g and 80 Hz	
Degree of protection	IP65	
Weight	Linear mounting kit - 0.78 kg (1.72 lb)	
	Rotary mounting kit - 0.4 kg (0.88 lb)	
	Positioner (without mounting kits or gauge blocks) - 3.0 kg (6.61 lb)	
Basic positioner options	SP7-20	4-20 mA or 4-20 mA with HART
	SP7-21	PROFIBUS PA
	SP7-22	FOUNDATION Fieldbus

Dimensions (approximate) in mm (and inches)

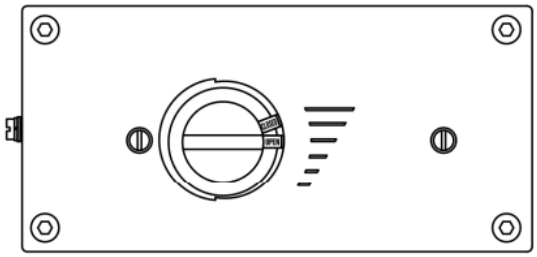

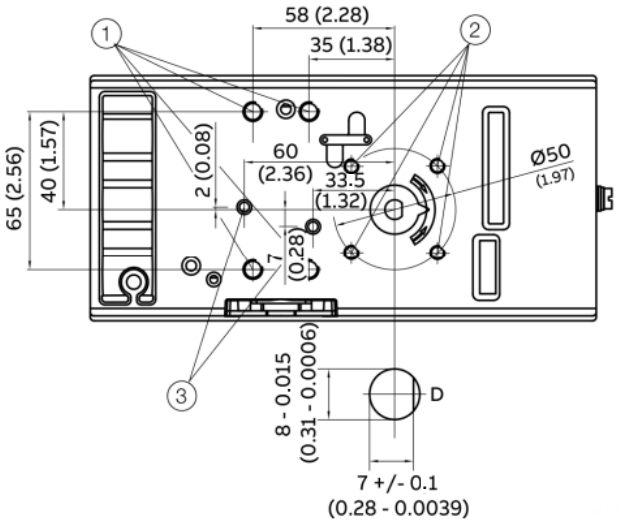

① Threaded hole M8 (10 mm (0.39") deep)

② Threaded hole M6 (8 mm (0.31") deep)

③ Threaded hole M5 x 0.5 (air outputs for integral mount)

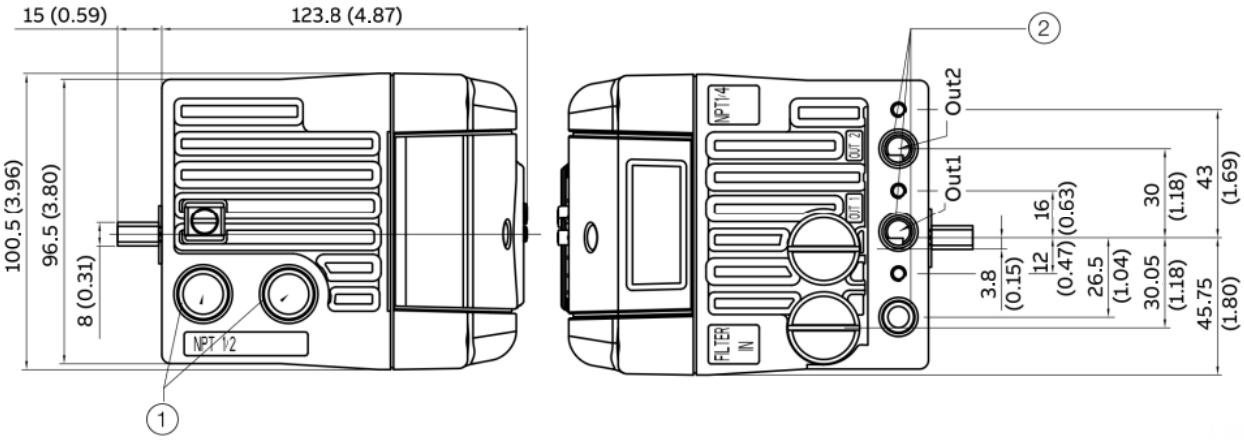

① NPT ½" or M20 x 1.5

② Pneumatic connections, NPT ¼" - 18 oder G¼"

Dimensions (approximate) in mm (and inches)

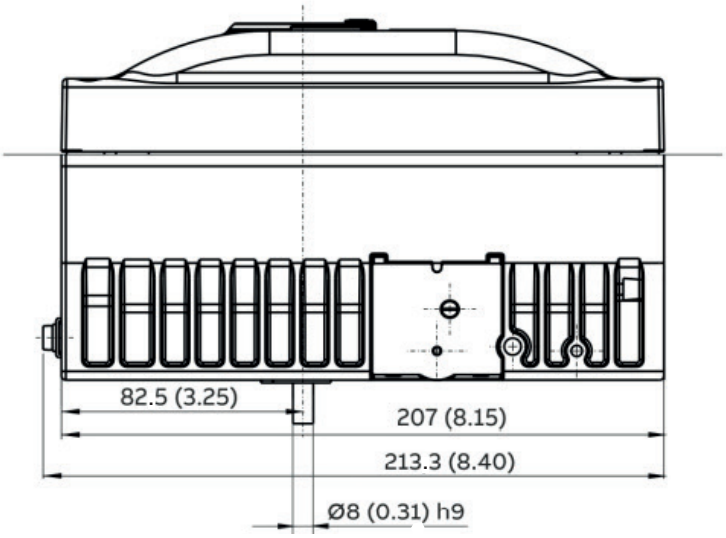

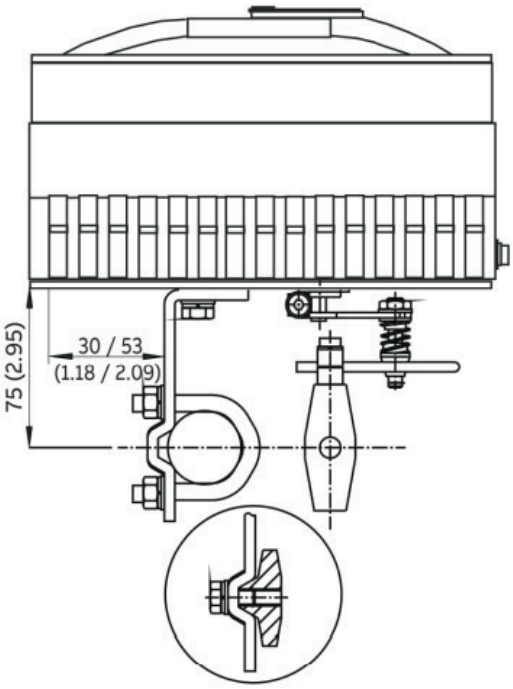

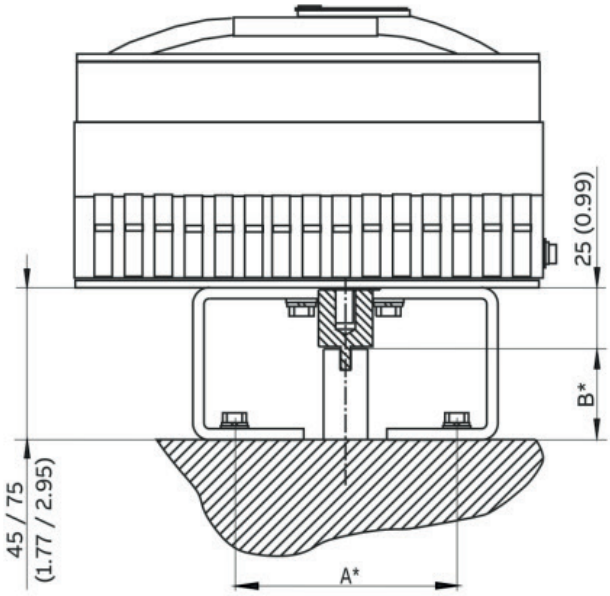

* Dimensions A and B depend on the rotary actuator

Rotary positioner mounting kits

Actuator mounting dimensions	Spirax kit nomenclature
80/20 mm (3.15/0.79 inches)	AKR13
80/30 mm (3.15/1.18 inches)	AKR14
130/30 mm (5.12/1.18 inches)	AKR15
130/50 mm (5.12/1.97 inches)	AKR16

For BVA actuators the AKR14 mounting kit is required.

Positioner options - SP7-20 - 4-20mA or 4-20 mA with HART

Standard	Case/Mounting	Case made of aluminium, varnished, for mounting to linear actuators acc. DIN/IEC 534/NAMUR or to rotary actuators acc. VDI/VDE 3845	10
		Case made of aluminium, varnished, with mechanical position indicator, for mounting to linear actuators acc. DIN/IEC 534/NAMUR or to rotary actuators acc. VDI/VDE 3845	20
	Operation	With operator panel and display integrated in the enclosure cover	1
	Explosion Protection	ATEX II 2G Ex db II C T4/T5/T6 Gb	1
		IECEx Ex db II C T4/T5/T6 Gb	6
		INMETRO Ex db IIC T6 .....T4 Gb	S
		NEPSI Ex db IIC T4/T5/T6 Gb	X
	Output/Safe Position (in case of an electrical power failure)	Single acting, fail safe	1
		Single acting, fail freeze	2
		Double acting, fail safe	3
		Double acting, fail freeze	4
	Connections	Cable: Thread M20 x 1.5, air pipe: Thread ¼-18 NPT	2
		Cable: Thread ½-14 NPT, air pipe: Thread ¼-18 NPT	3
	Option Modules for Analog or Digital Position Feedback	Without	0
		Plug-in module for analog position feedback, signal range 4 ... 20 mA, two-wire	1
		Plug-in module for digital position feedback	3
		Plug-in module for analog position feedback, signal range 4 ... 20 mA, two-wire, and digital position feedback	4
	Optional Mechanical Kit for Digital Position Feedback	Without	0
		Mechanical kit for digital position feedback with proximity switches SJ2-SN (NC or logical 1)	1
		Mechanical kit for digital position feedback with 24 V AC/DC microswitches (change-over contacts) (Note 2)	3
	Parameter Setting/Bus Address	Factory setting for HART devices	1
	Design (Varnish/Coding)	Standard	1
		Higher Stiffness + Lower Air Capacity	H
		Protection Class IP 66	P
	Device Identification Label	Without	0
		Stainless steel 18.5 x 65 mm (0.73 x 2.56 in.) (Note 3)	2
Optional	CCC Certification	CCC for Ex db	CCC

SP7-20

Note 1: Only with cable connection NPT thread
Note 2: Only for Ex d version
Note 3: Plain text, max. 16 letters

Ordering Code Example: SP7-20 | 10 | 1 | 1 | 3 | 2 | 0 | 1 | 1 | 1 | 2

Positioner options - SP7-21 - PROFIBUS PA

Standard	Case/Mounting	Case made of aluminium, varnished, for mounting to linear actuators acc. DIN/IEC 534/NAMUR or to rotary actuators acc. VDI/VDE 3845	10
		Case made of aluminium, varnished, with mechanical position indicator, for mounting to linear actuators acc. DIN/IEC 534/NAMUR or to rotary actuators acc. VDI/VDE 3845	20
	Operation	With operator panel and display integrated in the enclosure cover	1
	Explosion Protection	ATEX II 2G Ex db II C T4/T5/T6 Gb	1
		IECEx Ex db II C T4/T5/T6 Gb	6
		INMETRO Ex db IIC T6 .....T4 Gb	S
		NEPSI Ex db IIC T4/T5/T6 Gb	X
	Output/Safe Position (in case of an electrical power failure)	Single acting, fail safe	1
		Single acting, fail freeze	2
		Double acting, fail safe	3
		Double acting, fail freeze	4
	Connections	Cable: Thread M20 x 1.5, air pipe: Thread ¼-18 NPT	2
		Cable: Thread ½-14 NPT, air pipe: Thread ¼-18 NPT	3
	Option Module for Shutdown Function	Without	0
	Optional Mechanical Kit for Digital Position Feedback	Without	03
		Mechanical kit for digital position feedback with proximity switches SJ2-SN (NC or logical 1)	13
		Mechanical kit for digital position feedback with 24 V AC/DC microswitches (change-over contacts) (Note 2)	33
	Design (Varnish/Coding)	Standard	1
		Higher Stiffness + Lower Air Capacity	H
		Protection Class IP 66	P
	Device Identification Label	Without	0
		Stainless steel 18.5 x 65 mm (0.73 x 2.56 in.) (Note 3)	2
Optional	CCC Certification	CCC for Ex db	CCC

SP7-21

Note 1: Only with cable connection NPT thread
Note 2: Only for Ex d version
Note 3: Plain text, max. 16 letters

Ordering Code Example: SP7-21 | 20 | 1 | 1 | 2 | 2 | 0 | 0 | 3 | 1 | 0

Positioner options - SP7-22 - FOUNDATION Fieldbus

Standard	Case/Mounting	Case made of aluminium, varnished, for mounting to linear actuators acc. DIN/IEC 534/NAMUR or to rotary actuators acc. VDI/VDE 3845	10
		Case made of aluminium, varnished, with mechanical position indicator, for mounting to linear actuators acc. DIN/IEC 534/NAMUR or to rotary actuators acc. VDI/VDE 3845	20
	Operation	With operator panel and display integrated in the enclosure cover	1
	Explosion Protection	ATEX II 2G Ex db II C T4/T5/T6 Gb	1
		IECEx Ex db II C T4/T5/T6 Gb	6
		INMETRO Ex db IIC T6 .....T4 Gb	S
		NEPSI Ex db IIC T4/T5/T6 Gb	X
	Output/Safe Position (in case of an electrical power failure)	Single acting, fail safe	1
		Single acting, fail freeze	2
		Double acting, fail safe	3
		Double acting, fail freeze	4
	Connections	Cable: Thread M20 x 1.5, air pipe: Thread ¼-18 NPT	2
		Cable: Thread ½-14 NPT, air pipe: Thread ¼-18 NPT	3
	Option Modules for Shutdown Function	Without	0
	Optional Mechanical Kit for Digital Position Feedback	Without	04
		Mechanical kit for digital position feedback with proximity switches SJ2-SN (NC or logical 1)	14
		Mechanical kit for digital position feedback with 24 V AC/DC microswitches (change-over contacts) (Note 2)	34
	Design (Varnish/Coding)	Standard	1
		Higher Stiffness + Lower Air Capacity	H
		Protection Class IP 66	P
	Device Identification Label	Without	0
		Stainless steel 18.5 x 65 mm (0.73 x 2.56 in.) (Note 3)	2
Optional	CCC Certification	CCC for Ex db	CCC

SP7-22

Note 1: Only with cable connection NPT thread
Note 2: Only for Ex d version
Note 3: Plain text, max. 16 letters

Ordering Code Example: SP7-22 | 10 | 1 | 1 | 3 | 2 | 0 | 34 | P | 2

Mounting/linkage kit : Positioner mounting kits for central mounting

Actuator model	Valve models	Valve sizes		Spirax kit nomenclature
PN9100	Spira-trol two port and QL three port	DN15 to DN50	(½" to 2")	AKL10
PN9200		DN15 to DN100	(½" to 4")	AKL10
PN9300				
PN9400		DN125 to DN300	(5" to 12")	AKL17
TN2150	Spira-trol two port and QL three port	DN15 to DN100	(½" to 4")	AKL10
TN2300		DN125 to DN300	(5" to 12")	AKL17
TN2400	Spira-trol two port and QL three port	DN125 to DN300	(5" to 12")	AKL17
TN2270				
PN3000 Sprg Ext	LE, LEA and Steri-trol	DN15 to DN100	(½" to 4")	AKL10
PN4000 Sprg Ret				
PN5000	KE, KEA, LE and QL three port	DN15 to DN100	(½" to 4")	AKL10 +UBC
PN6000				
PN5000	QL three port	DN125 to DN200	(5" to 8")	AKL11 + UBC
PN6000				
PN1600	''C' series	DN65 to DN100	(2½" to 4")	AKL11
PN1600		DN125 to DN200	(5" to 8")	AKL11
PN1600	Spira-trol	DN125 to DN300	(5" to 12")	AKL11

BVA actuators

For BVA actuators the AKR14 mounting kit is required.

Gauge blocks

		Spirax Nomenclature	Weight	
6 bar/87 psi NPT¼"	Single acting	GBS6A	0.28 kg	(0.62 lb)
	Double acting	GBD6A	0.32 kg	(0.71 lb)
0.6 Mpa/87 psi NPT¼"	Single acting	GBS06A	0.28 kg	(0.62 lb)
	Double acting	GBD06A	0.32 kg	(0.71 lb)

How to order

Example: 1 off Spirax Sarco SP7-20-10113201112 Smart positioner with AKL10 mounting kit and GBS6A gauge block.
Caution: The SP7-20 positioner must have a high quality air supply to ISO 8573-1:2010 Class 3:3:3.