FT46
Stainless Steel
Ball Float Steam Traps DN15 to DN50 (½" to 2")

FT46
4.5 bar - 21 bar (65 psi - 305 psi)
DN15, DN20 and DN25 (½", ¾", and 1")

DN15 (½") shown

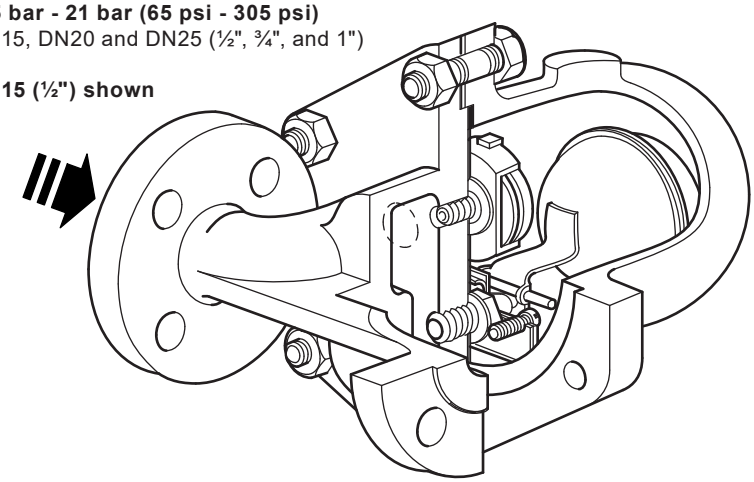

FT46
DN15 to DN50
(½" to 2")

32 bar

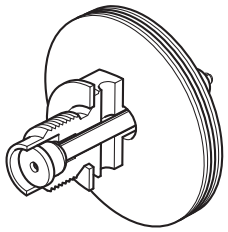

FT46
4.5, 10 and 21 bar (65, 145, and 305 psi)
DN40 and DN50 (1½" and 2")
DN50 (2") shown

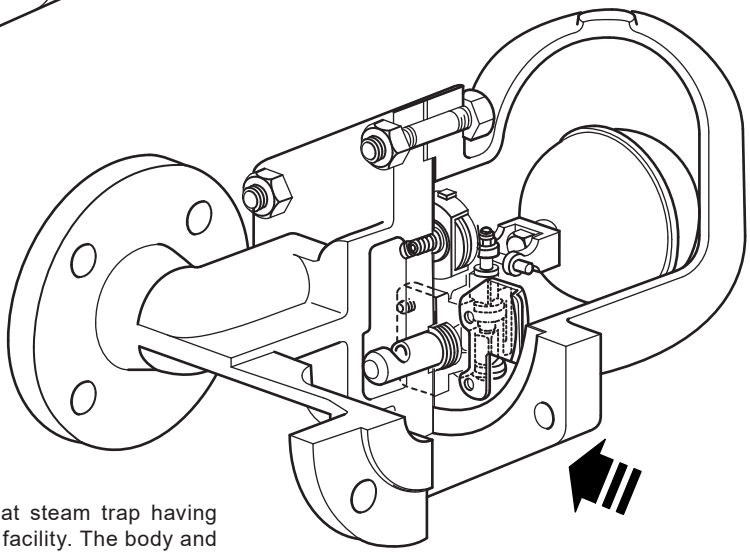

FT46-C
4.5-21 bar (65 psi - 305 psi)

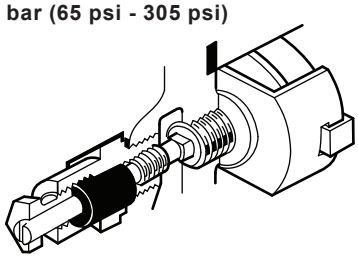

Description
The FT46 is an austenitic stainless steel bodied ball float steam trap having stainless steel working internals and automatic air venting facility. The body and cover castings are produced by a TÜV approved foundry. The trap is supplied with integrally flanged connections and can be maintained without disturbing the pipework. Flow direction for the horizontal trap is clearly illustrated above.

Air vent
The BP99/32 capsule which is used in the FT46 is suitable for use on 150 °C (302 °F) superheat @ 0 bar g. This value reduces with elevated pressure.
The bimetallic element is fitted as standard to the 32 bar (464 psi) variants to provide additional superheat resistance. It is also available on other variants on request. Please refer to the Pressure/temperature limits graph on page 2.

Standards
This product fully complies with the requirements of the European Pressure Equipment Directive 2014/68/EU and carries the CE mark when so required.

Certification
This product is available with certification to EN 10204 3.1.
Note: All certification/inspection requirements must be stated at the time of order placement.

Optional extras

A **manually adjustable needle valve** (designated '**C**' on the nomenclature i.e. **FT46-C**) can be fitted to the trap. This option provides a **steam lock release (SLR)** feature in addition to the standard air vent.
Note: The SLR and bimetallic air vent cannot be used in conjunction with each other. Alternative arrangements may be available. For further information please consult Spirax Sarco.
The **top of the cover can be drilled and tapped ⅜" BSP T Rp (ISO 7-1) or NPT** for the purpose of fitting a balance line if requested at the point of order.
The **bottom of the cover can be drilled and tapped ⅜" BSP T Rp (ISO 7-1) or NPT** for the purpose of fitting a drain cock if requested at the point of order.

Sizes and pipe connections

DN15, DN20, DN25, DN40 and DN50 (½", ¾", 1", 1½" and 2").

Note: Flow direction when facing the body: **-** DN15 to DN25 (½" to 1") is left to right. **-** DN40 and DN50 (1½" and 2") is right to left.

Standard flanges are EN 1092 PN40 with face-to-face dimensions in accordance with EN 26554 (Series 1).
On request - ASME (ANSI) B 16.5 Class 150 and 300 flanges are available with face-to-face dimensions in accordance with EN 26554 (Series 1).
Note: ASME (ANSI) flanges are supplied with tapped (UNC) holes for flange bolts.

Pressure/temperature limits

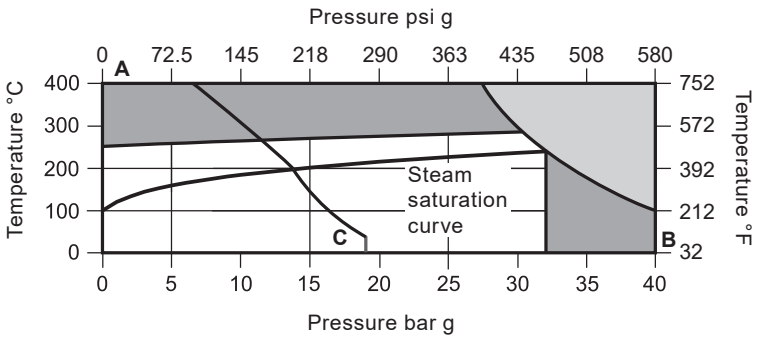

The product **must not** be used in this region.

This product should not be used in this region as damage to the air vent may occur.

A - B Flanged EN 1092 PN40 and ASME (ANSI) 300.

A - C Flanged ASME (ANSI) 150.

Note: The use of the bimetallic element extends the superheat resistance to in excess of 400 °C (752 °F).

Body design conditions				
PMA	Maximum allowable pressure		40 bar g @ 100 °C	580 psi g @ 212 °F
TMA	Maximum allowable temperature		400 °C @ 27.4 bar g	752 °F @ 397 psi g
Minimum allowable temperature			-10 °C	14 °F
PMO	Maximum operating pressure for saturated steam service		32 bar g @ 239 °C	464 psi g @ 462 °F
TMO	Maximum operating temperature	When fitted with a capsule	285 °C @ 30.3 bar g	545 °F @ 439 psi g
		When fitted with a bimetallic air vent	400 °C @ 27.4 bar g	752 °F @ 397 psi g
Minimum operating temperature **Note:** For lower operating temperatures consult Spirax Sarco			0 °C	32 °F

		Size	**DN15 DN20 DN25**	**½" ¾" 1"**	**DN40 DN50**	**1½" 2"**
Δ PMX	Maximum differential pressure	**FT46-4.5**	4.5 bar	65 psi	4.5 bar	65 psi
		FT46-10	10 bar	145 psi	10 bar	145 psi
		FT46-14	14 bar	203 psi	-	-
		FT46-21	21 bar	305 psi	21 bar	305 psi
		FT46-32	32 bar	464 psi	32 bar	464 psi

Product is safe for use under full vacuum conditions		
Designed for a maximum cold hydraulic test pressure:	60 bar g	870 psi g
Note: With internals fitted, test pressure must not exceed:	48 bar g	696 psi g

Caution: The trap in its complete operational form must not be subjected to a pressure greater than 48 bar (696 psi) otherwise damage to the internal mechanism may result.

Materials - FT46 **4.5 bar - 21 bar** DN15, DN20 and DN25

DN15 shown

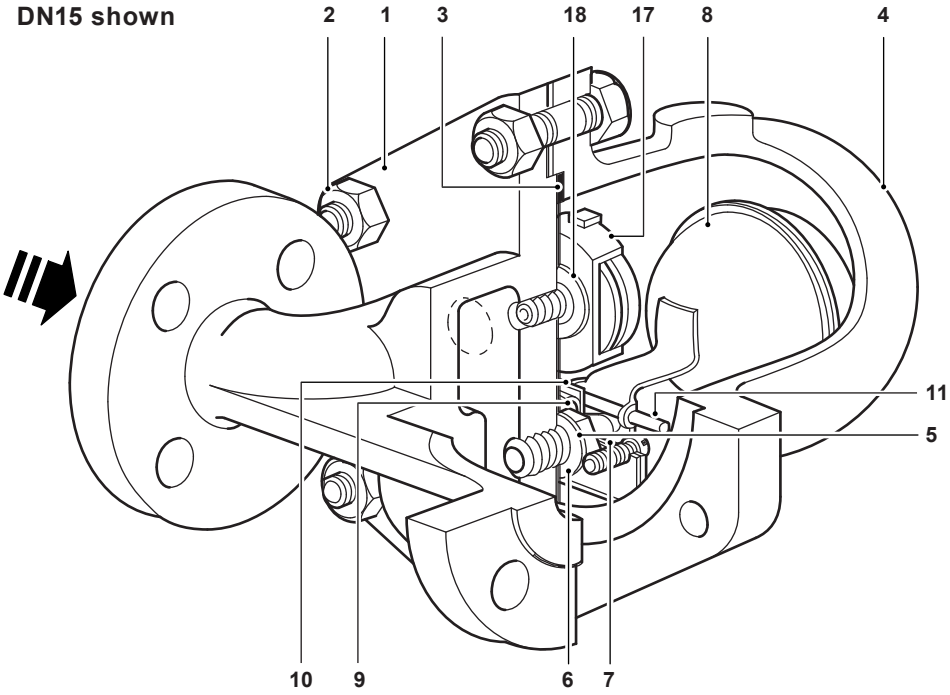

FT46
DN15 to DN50

32 bar

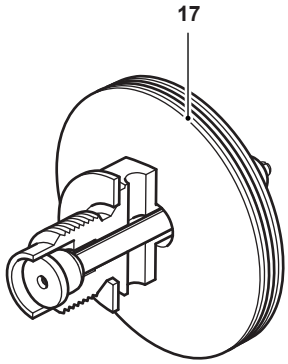

No.	Part		Material		
1	Body		Austenitic stainless steel (316)		1.4408/CF8M
2	Cover studs		Austenitic stainless steel		A2.70
	Cover nuts		Austenitic stainless steel		A4
3	Cover gasket		Reinforced exfoliated graphite		
4	Cover		Austenitic stainless steel (316)		1.4408/CF8M
5	Valve seat		DN15, DN20 and DN25 (½", ¾" and 1")	Stainless steel	BS 970 431 S29
	Main valve assembly		DN40 and DN50 (1½" and 2")	Stainless steel	BS 3146 Pt2 ANC2 BS 970 416 S37
6	Valve seat gasket		DN15, DN20 and DN25 (½", ¾" and 1")	Stainless steel	BS 1449 304 S11
	Main valve assembly gasket		DN40 and DN50 (1½" and 2")	Reinforced exfoliated graphite	
7	Pivot frame assembly set screws		DN15, DN20 and DN25 (½", ¾" and 1")	Stainless steel	BS 4183 18/8
	Main valve assembly	Bolts	DN40 (½")	Stainless steel	BS 970 304 S15
		Studs and nuts	DN50 (¾")	Stainless steel	BS 6105 A4.80
8	Ball float and lever			Stainless steel	BS 1449 304 S16
9	Support frame		DN15, DN20 and DN25 (½", ¾" and 1")	Stainless steel	BS 1449 304 S16
10	Pivot frame		DN15, DN20 and DN25 (½", ¾" and 1")	Stainless steel	BS 1449 304 S16
11	Pivot pin		DN15, DN20 and DN25 (½", ¾" and 1")	Stainless steel	
17	Air vent assembly for all pressure ratings			Stainless steel	
18	Air vent seat gasket			Stainless steel	BS 1449 409 S19

Materials - FT46 4.5, 10 and 21 bar DN40 and DN50

DN50 shown

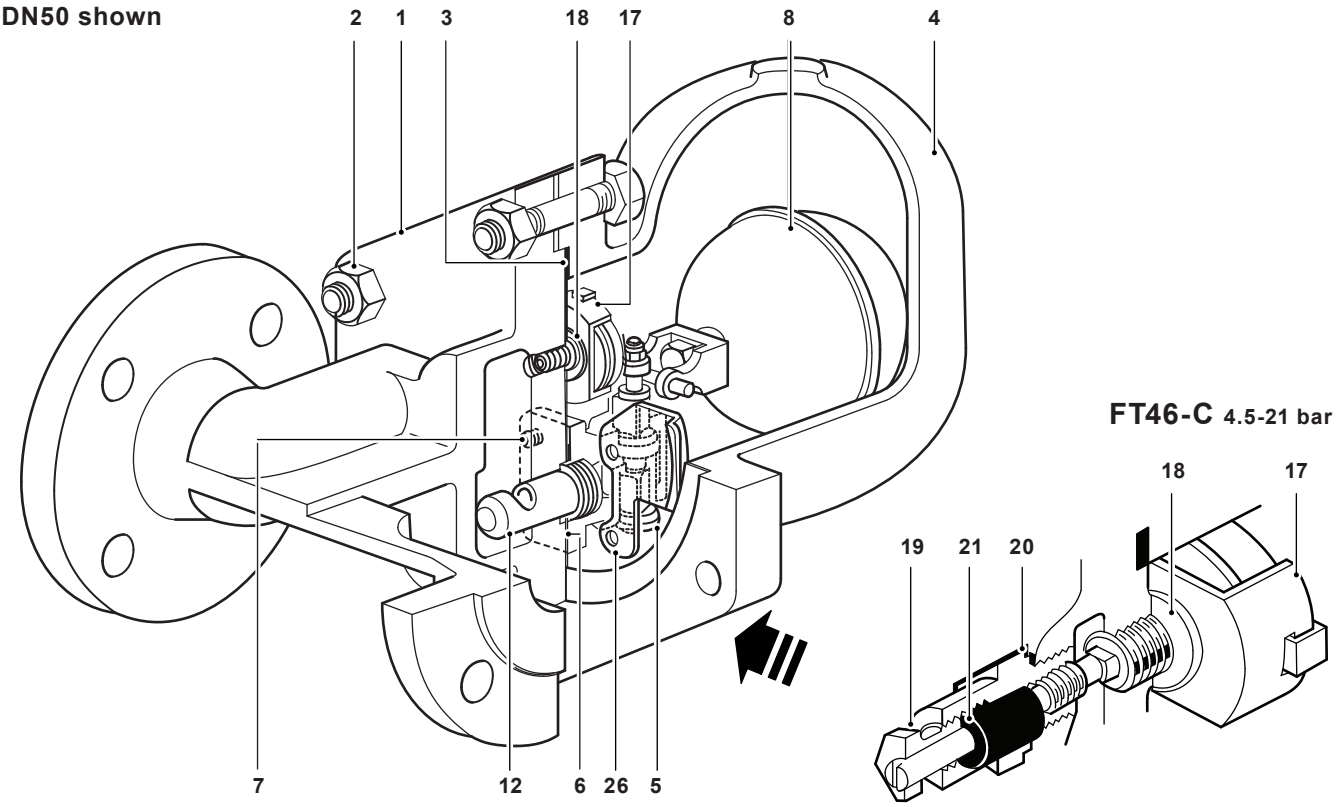

No.	Part		Material		
1	Body		Austenitic stainless steel (316)		1.4408/CF8M
2	Cover studs		Austenitic stainless steel		A2.70
	Cover nuts		Austenitic stainless steel		A4
3	Cover gasket		Reinforced exfoliated graphite		
4	Cover		Austenitic stainless steel (316)		1.4408/CF8M
5	Valve seat		DN15, DN20 and DN25 (½", ¾" and 1")	Stainless steel	BS 970 431 S29
	Main valve assembly		DN40 and DN50 (1½" and 2")	Stainless steel	BS 3146 Pt2 ANC2 BS 970 416 S37
6	Valve seat gasket		DN15, DN20 and DN25 (½", ¾" and 1")	Stainless steel	BS 1449 304 S11
	Main valve assembly gasket		DN40 and DN50 (1½" and 2")	Reinforced exfoliated graphite	
7	Pivot frame assembly set screws		DN15, DN20 and DN25 (½", ¾" and 1")	Stainless steel	BS 4183 18/8
	Main valve assembly	Bolts	DN40 (½")	Stainless steel	BS 970 304 S15
		Studs and nuts	DN50 (¾")	Stainless steel	BS 6105 A4.80
8	Ball float and lever			Stainless steel	BS 1449 304 S16
9	Support frame		DN15, DN20 and DN25 (½", ¾" and 1")	Stainless steel	BS 1449 304 S16
10	Pivot frame		DN15, DN20 and DN25 (½", ¾" and 1")	Stainless steel	BS 1449 304 S16
11	Pivot pin		DN15, DN20 and DN25 (½", ¾" and 1")	Stainless steel	
12	Erosion deflector			Stainless steel	BS 970 431 S29
17	Air vent assembly for all pressure ratings			Stainless steel	
18	Air vent seat gasket			Stainless steel	BS 1449 409 S19
19	SLR assembly			Stainless steel	BS 970 303 S31
20	SLR gasket			Stainless steel	BS 1449 304 S11
21	SLR seal			Graphite	
26	Inlet plate		DN40 and DN50 (1½" and 2") only	Stainless steel	BS 1449 304 S16

Capacities

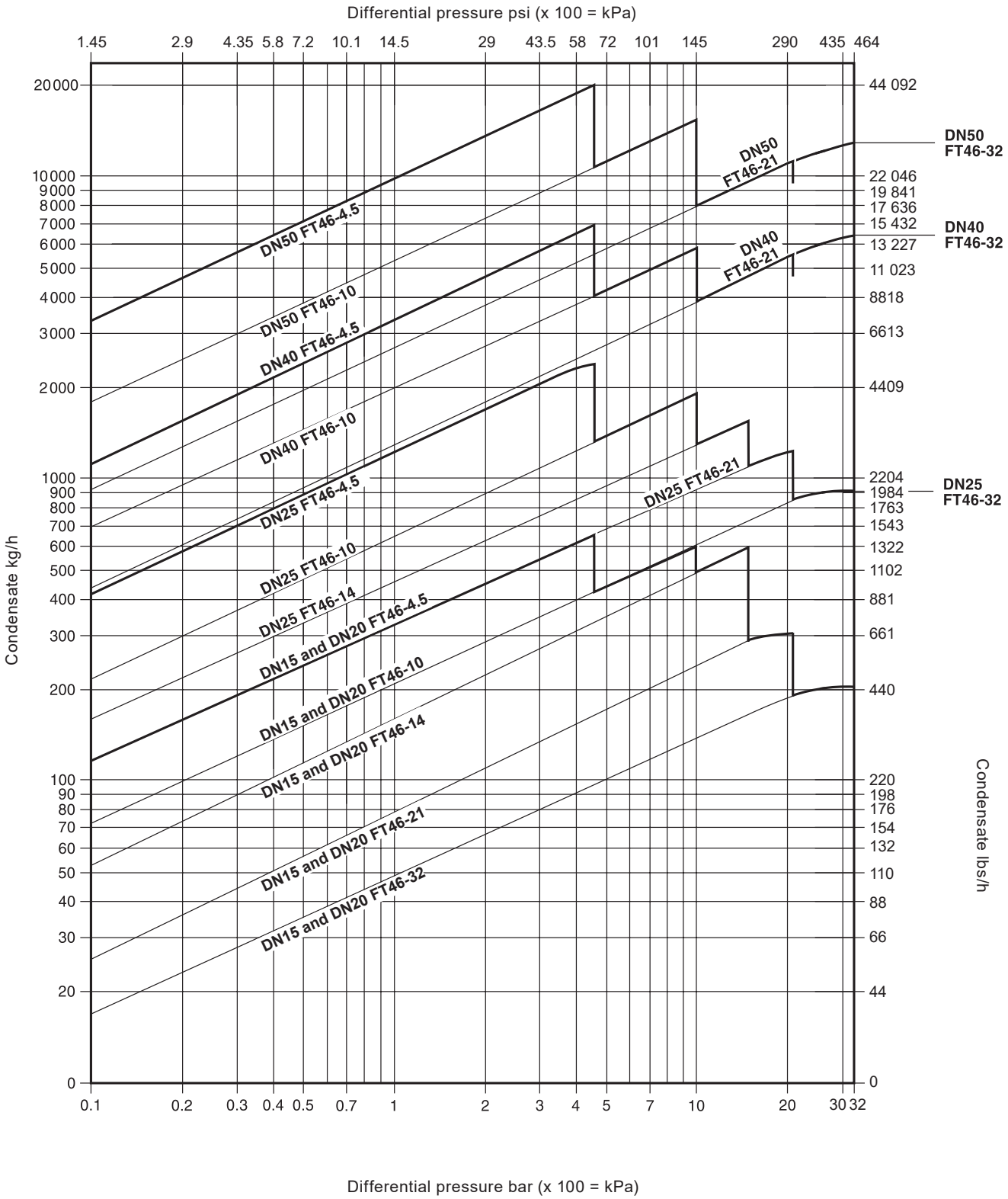
Differential pressure psi (x 100 = kPa)
1.45 2.9 4.35 5.8 7.2 10.1 14.5 29 43.5 58 72 101 145 290 435 464
Condensate kg/h
20000 10000 9000 8000 7000 6000 5000 4000 3000 2000 1000 900 800 700 600 500 400 300 200 100 90 80 70 60 50 40 30 20 0
Condensate lbs/h
44 092 22 046 19 841 17 636 15 432 13 227 11 023 8818 6613 4409 2204 1984 1763 1543 1322 1102 881 661 440 220 198 176 154 132 110 88 66 44 0
DN50 FT46-32
DN40 FT46-32
DN25 FT46-32
DN50 FT46-21
DN40 FT46-21
DN25 FT46-21
DN50 FT46-4.5
DN50 FT46-10
DN40 FT46-4.5
DN40 FT46-10
DN25 FT46-4.5
DN25 FT46-10
DN25 FT46-14
DN15 and DN20 FT46-4.5
DN15 and DN20 FT46-10
DN15 and DN20 FT46-14
DN15 and DN20 FT46-21
DN15 and DN20 FT46-32
0.1 0.2 0.3 0.4 0.5 0.7 1 2 3 4 5 7 10 20 30 32
Differential pressure bar (x 100 = kPa)

Additional cold water capacities from the thermostatic air vent under start-up conditions

Capacities shown above are based on condensate at saturation temperature. Under start-up conditions when the condensate is cold the internal thermostatic air vent will be open and provides additional capacity to the main valve.

The following table gives the minimum additional cold water capacities from the air vent.

ΔP (bar)		0.5 (7)	1 (15)	2 (29)	3 (44)	4.5 (65)	7 (102)	10 (145)	14 (203)	21 (305)	32 (464)
		Minimum additional cold water capacity in kg/h (lb/h)									
DN15 and DN20	up to 21 bar	450 (992)	600 (1323)	780 (1720)	1040 (2293)	1140 (2513)	1350 (2976)	1530 (3373)	1750 (3858)	2300 (5071)	-
	32 bar only	170 (375)	250 (551)	380 (838)	520 (1146)	600 (1323)	780 (1720)	860 (1896)	1140 (2513)	1170 (2579)	1200 (2646)
DN25, DN40 and DN50	up to 21 bar	460 (1014)	680 (1499)	900 (1984)	1080 (2381)	1300 (2866)	1600 (3527)	1980 (4365)	2050 (4519)	2600 (5732)	-
	32 bar only	90 (198)	120 (264)	350 (772)	460 (1014)	600 (1323)	850 (1874)	900 (1984)	1020 (2249)	1200 (2646)	1300 (2866)

Dimensions/weights (approximate) in mm (inches) and kg (lbs)

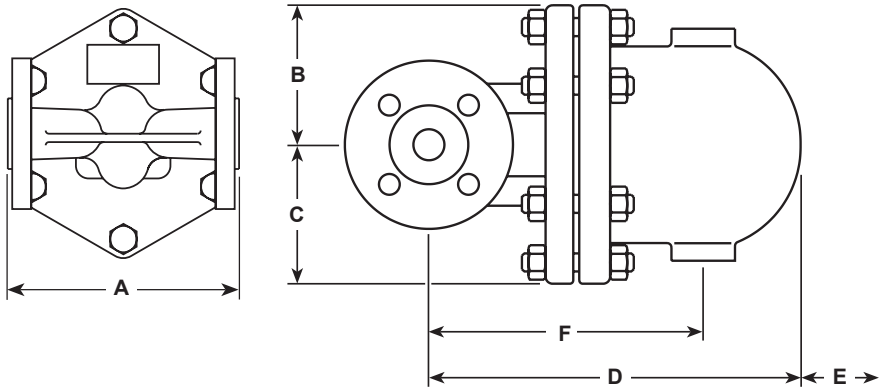

FT46

DN15 and DN20
(½" and ¾")

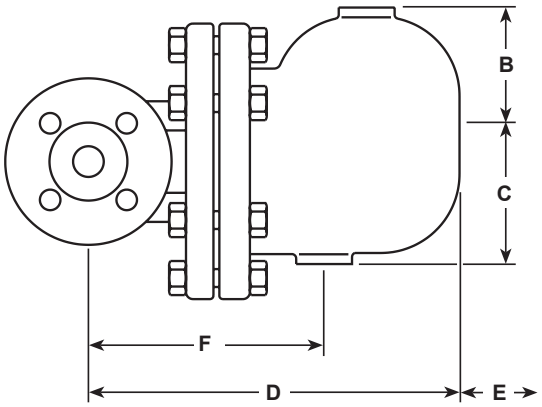

FT46

DN25, DN40 and DN50
(1", 1½" and 2")

Size	A	B	C	D	E	F	Weight
DN15	150 (5.91)	80 (3.15)	80 (3.15)	215 (8.46)	120 (4.72)	155 (6.10)	10.8 (23.8)
DN20						165 (6.50)	10.8 (23.8)
DN25	160 (6.30)	115 (4.53)	85 (3.35)	276 (10.9)	170 (6.69)	215 (8.46)	15.0 (33.1)
DN40	230 (9.06)	130 (5.12)	80 (3.15)	326 (12.8)	200 (7.87)	200 (7.87)	33.0 (72.8)
DN50		141 (5.55)	91 (3.58)	332 (13.1)		236 (9.29)	43.0 (94.8)

Face-to-face dimensions in accordance with EN 26554 (Series 1)

Safety information, installation and maintenance

For full details see the Installation and Maintenance Instructions (IM-S02-30) supplied with the product.

Installation note:

The FT46 must be installed with the direction of flow as indicated on the body, and with the float arm in a horizontal plane so that it rises and falls vertically.

Disposal

This product is recyclable. No ecological hazard is anticipated with the disposal of this product providing due care is taken.

How to order

Note: Although FT46 4.5 bar - 21 bar (65 psi - 305 psi) versions are fitted with a capsule air vent assembly as standard, they can be fitted with a bimetallic air vent assembly upon request.
Example: 1 off Spirax Sarco DN25 FT46-21 ball float steam trap, having an austenitic stainless steel body and cover with a bimetallic air vent assembly. Connections are to be flanged to EN1092 PN40.

Note: Although the FT46 32 bar (464 psi) is fitted with a bimetallic air vent assembly as standard, it can be fitted with a capsule air vent assembly and steam lock release feature upon request.
Example: 1 off Spirax Sarco DN25 FT46-21 ball float steam trap, having an austenitic stainless steel body and cover with a capsule air vent assembly. Connections are to be flanged to EN1092 PN40.

Spare parts

The spare parts available are shown in solid outline. Parts drawn in a grey line are not supplied as spares.

Available spares

Main valve assembly with float	DN15, DN20, and DN25 (½", ¾" and 1")	**5, 6, 7, 8, 9, 10, 11**
Main valve assembly	DN40 and DN50 (1½" and 2")	**5, 6, 7, 12, 26**
Ball float	DN40 and DN50 (1½" and 2")	**8**
Air vent assembly	Bimetallic air vent assembly Capsule air vent assembly	**17, 18**
Steam lock release and capsule air vent assembly (FT46-C)		**17, 18, 19, 20, 21**
Complete set of gaskets (packet of 3 sets)		**3, 6, 18, 20, 21**

Note: Item 12 (Erosion deflector) is only used in DN40 and DN50 (1½" and 2").

How to order spares

Always order spares by using the description given in the column headed 'Available spares' and state the size and type of trap, including pressure range.
Example: 1 - Capsule air vent assembly for a Spirax Sarco DN20 FT46-4.5 ball float steam trap.

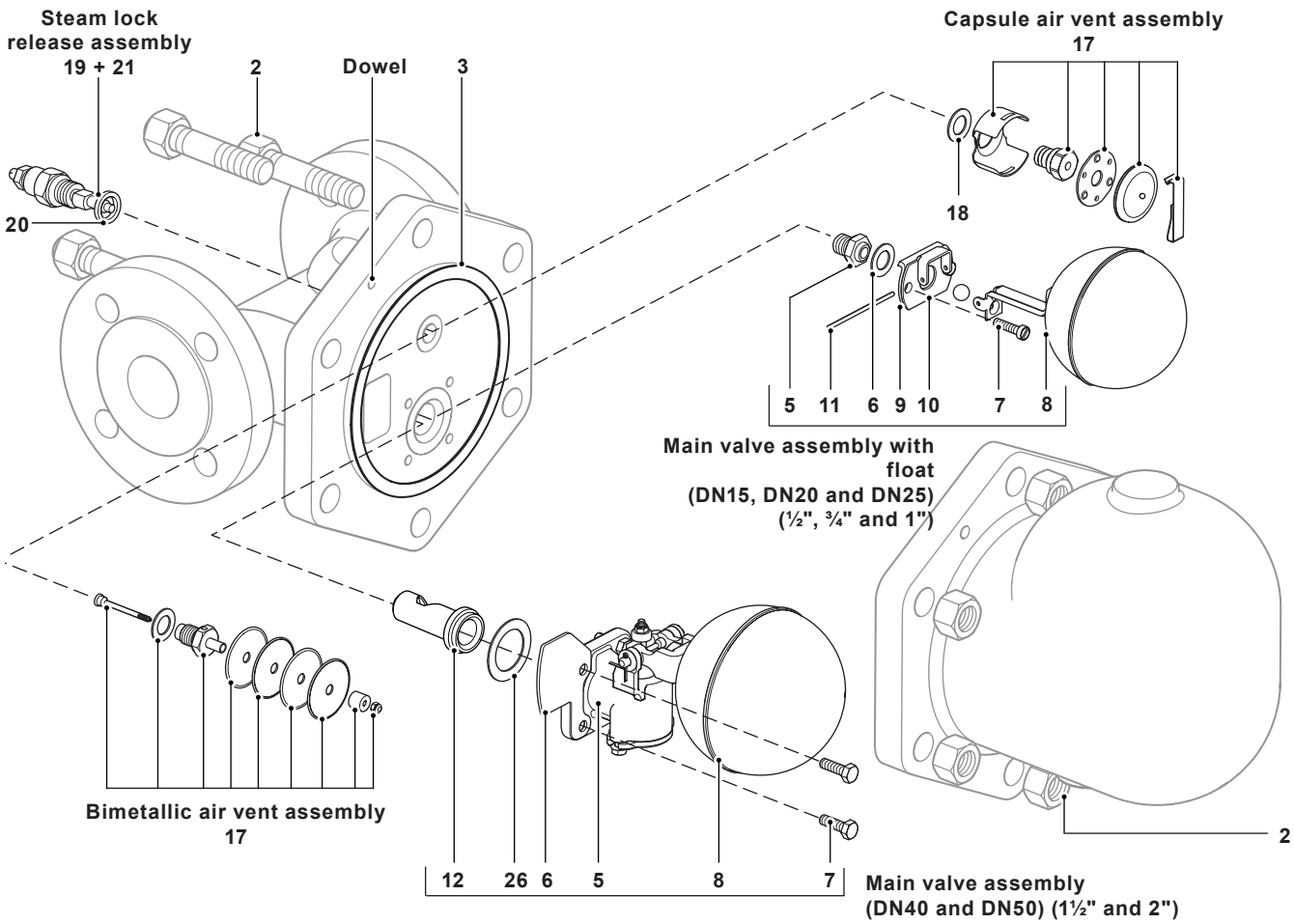

For Recommended tightening torques, see next page

Recommended tightening torques

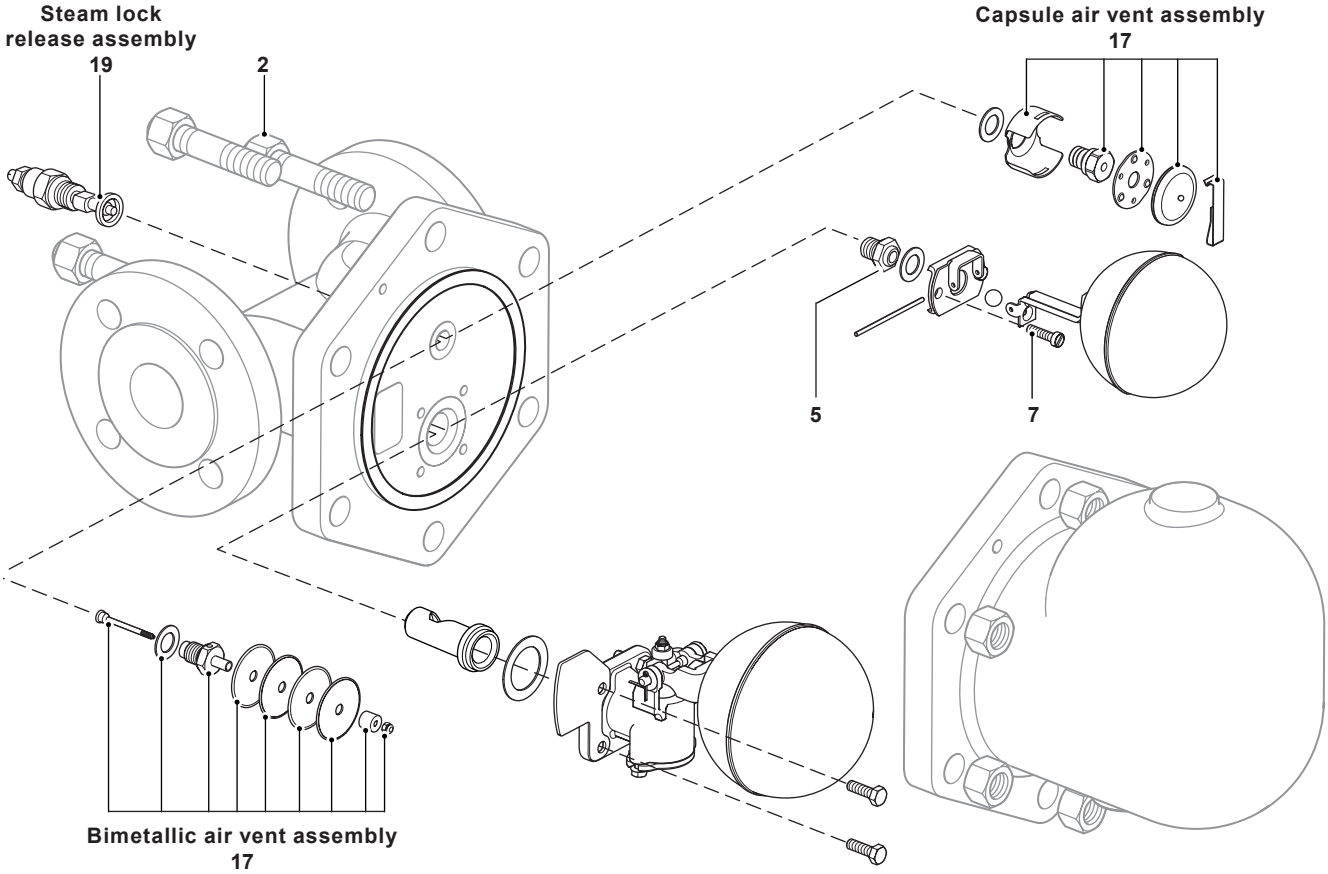

Item	Size	or mm		N m	(lbf ft)
2	DN15, 20 and 25	17 A/F	M10 x 60	19 - 22	(14-16)
	DN40	19 A/F	M16 x 85	60 - 66	(44-47)
	DN50	24 A/F	M16 x 85	80 - 88	(59-65)
5	DN15, 20 and 25	17 A/F		50 - 55	(37-41)
7	DN15, 20 and 25		M5 x 20	2.5 - 2.8	(1-2)
	DN40	10 A/F	M6 x 20	10 - 12	(7-9)
	DN50	13 A/F	M8 x 20	20 - 24	(15-18)
17		17 A/F		50 - 55	(37-41)
19		22 A/F			