CSG-HS
Clean steam generation system for Healthcare

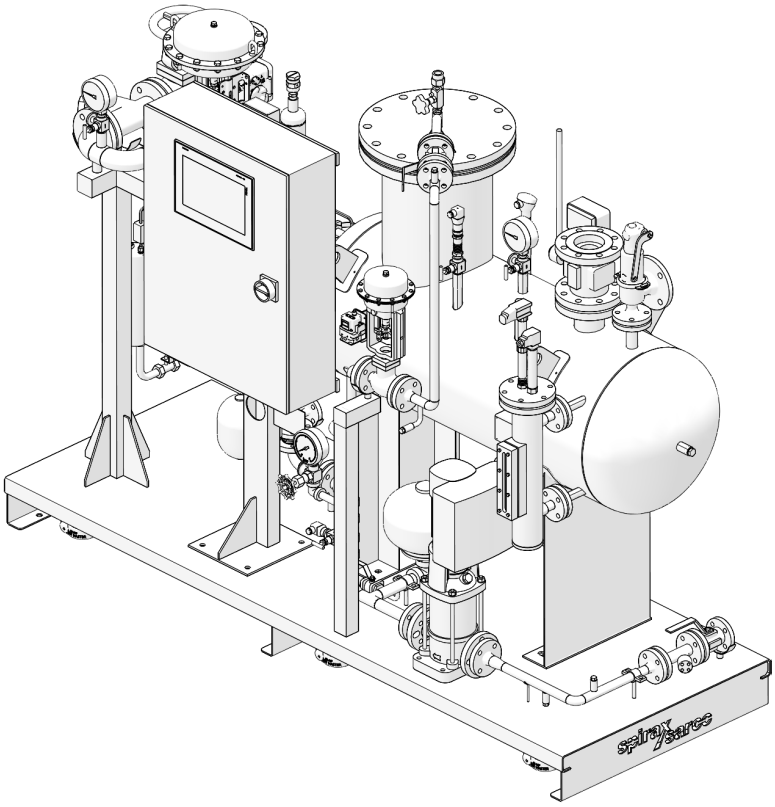

Description

The Spirax Sarco CSG-HS Clean Steam Generator range has been specifically designed for sterilisation applications within the Healthcare sector and to produce high quality steam under a wide variety of operating conditions. The system operates using plant steam as the primary heating medium. All Systems are supplied packaged and ready to install with simple commissioning.

Product range

Size:	**CSG-HS - 020**	nominal production capacity 200 kg/h (441 lbs/hr)*
	CSG-HS - 055	nominal production capacity 550 kg/h (1212 lbs/hr)*
	CSG-HS - 125	nominal production capacity 1250 kg/h (3968 lbs/hr)*
	CSG-HS - 180	nominal production capacity 1800 kg/h (4441 lbs/hr)*
Versions/Applications:	**HS**	Healthcare sterilisation.

(*) max steam production at reference operating conditions: primary steam at 9 bar g (130 psi g), production at 4 bar g (58 psi g), feed water at 20 °C (68 °F).

Construction and main features

- System complete, functional and safe
- Compact design
- Modulating pressure and level control: pressure stability and steam quality improvement
- Intelligent PLC with SIMS technology, easy maintenance
- Packaged system with on board wired control panel: easy installation
- Automated start up/commissioning sequence
- High quality dryness exceeds EN285 and ST79 on performance
- Configurable options to suit individual needs
- System diagnostics
- Preventive maintenance
- Preheater can reduce plant steam usage by a minimum of 8% at peak flow
- Spirax Sarco's worldwide service

Compliances available **but not standard** in all geographies

	EMEA		Americas		Asia Pacific	
	STD	On request	STD	On request	STD	On request
- CE mark with EU declaration of conformity according to the following directives:	●					●
- 2014/68/EU (PED)	●					●
- 2014/35/EU (LVD)	●					●
- 2014/30/EU (EMC)	●					●
- ASME design with U stamp certification			●			
- Chinese GB national standard					●	
- Seismic compliance		●		●		●

Design conditions

Primary side	Design pressure		12.8 bar g	(187 psi g)	For a bespoke design, contact Spirax Sarco
	Design temperature		194.4 °C	(382 °F)	
Secondary side	Design pressure		8 bar g	(116 psi g)	
	Design temperature		194.4 °C	(382 °F)	
	Safety valve set pressure		7 bar g	(101.5 psi g)	
Feedwater	Design pressure		8 bar g	(116 psi g)	
	Design temperature	without pump	110 °C	(230 °F)	
		with pump	100 °C	(212 °F)	

Maximum operating conditions

	Without pump	With pump
Production	Clean saturated steam, up to 6 bar g/165.0 °C (Clean saturated steam, up to 97 psi g/206 °F)	
Primary side	Plant steam, up to 12 bar g/191.7 °C (Plant steam, up to 174 psi g/345 °F)	
Feedwater	P min. ≥ P clean steam + 0.5 bar g (P min. ≥ P clean steam + 7.2 psi g)	Net positive suction head required (see IM)
	P max 8 bar g/T max 110 °C (P max 116 psi g/T max 230 °F)	P max 8 bar g/T max 80 °C (P max 116 psi g/T max 176 °F)

Minimum ambient temperature: 0 °C
Designed for indoor installation only, protect from freezing.

Note: Feedwater is recommended to be demineralised or Reverse Osmosis quality to ensure high performance.

Utilities

	Unit without pump	Unit with pump
Electrical supply (cabinets)	1 x 90-132 V AC or 1 x 180-264 V AC 50/60 Hz 0.4 kW (inst.)	3 x 200-460 V AC* 50/60 Hz 1 kW (sizes 020-055) (inst.) 1.5 kW (size 125) (inst.) 2 kW (size 180) (inst.)
Air supply (filters)	Minimum 5 bar g (72.5 psi g) to maximum 7 bar g (101.5 psi g) (only for the unit with pneumatic actuators)	

***Note:** A single leg is taken from the three phase supply to power the PSU, ensure the single leg will have a voltage in the range required for single phase.

Performance of the units without preheater option

Max clean steam production (kg/h), with feedwater at 20 °C:		Clean steam pressure/bar g		
		4.5	**4.0**	**3.5**
CSG-HS - 020	**10.0**	220	254	292
	9.5	200	234	271
	9.0	180	214	250
	8.5	159	192	229
	8.0	137	170	207
CSG-HS - 055	**10.0**	583	677	788
	9.5	531	620	727
	9.0	480	566	666
	8.5	426	511	606
	8.0	370	456	548
CSG-HS - 125	**10.0**	1,292	1,516	1,627
	9.5	1,171	1,385	1,490
	9.0	1,044	1,254	1,490
	8.5	930	1,126	1,350
	8.0	823	996	1,213
CSG-HS - 180	**10.0**	1,884	2,210	2,542
	9.5	1,692	2,016	2,361
	9.0	1,501	1,818	2,162
	8.5	1,313	1,619	1,959
	8.0	1,134	1,417	1,750

Plant steam pressure/bar g

Max clean steam production (lbs/hr), with feedwater at 68 °F:		Clean steam pressure/psi g		
		65.3	**58.0**	**50.8**
CSG-HS - 020	**145.0**	485	559	643
	137.8	441	515	598
	130.5	396	471	551
	123.3	350	424	504
	116.0	303	376	456
CSG-HS - 055	**145.0**	1285	1,492	1,736
	137.8	1170	1,368	1,602
	130.5	1058	1,248	1,468
	123.3	940	1,127	1,336
	116.0	815	1,006	1,208
CSG-HS - 125	**145.0**	2,849	3,341	3,587
	137.8	2,581	3,052	3,285
	130.5	2,302	2,764	3,285
	123.3	2,051	2,483	2,977
	116.0	1,814	2,195	2,673
CSG-HS - 180	**145.0**	4,153	4,872	5,603
	137.8	3,731	4,445	5,206
	130.5	3,309	4,009	4,767
	123.3	2,894	3,569	4,319
	116.0	2,500	3,124	3,858

Plant steam pressure/psi g

Dimensions approximate in mm and weights kg of a standard unit

	Dimensions					Weights		
	L Length	**W** Width	**H** Height	**E** Clearance for tube bundle extraction	xxx Clearance height for de-aerator extraction	Empty	In operation	Maximum
CSG-HS 020	2000	850	1850	1250	485	730	830	980
CSG-HS 055	2350	850	1850	1300	520	940	1140	1340
CSG-HS 125	2450	1450	2060	1600	630	1300	1650	1900
CSG-HS 180	2950	1450	2065	2000	630	1550	2050	2450

Dimensions approximate in mm and weights kg with preheater

	Dimensions					Weights		
	L Length	**W** Width	**H** Height	**E** Clearance for tube bundle extraction	xxx Clearance height for de-aerator extraction	Empty	In operation	Maximum
CSG-HS 020	2300	850	1850	1250	485	780	850	1030
CSG-HS 055	2650	850	1850	1300	520	960	1160	1360
CSG-HS 125	2450	1450	2060	1600	630	1300	1650	1900
CSG-HS 180	2950	1450	2065	2000	630	1550	2050	2450

Dimensions and weights of the units with EnEV option - insulation 100 mm

	Dimensions					Weights		
	L Length	**W** Width	**H** Height	**E** Clearance for tube bundle extraction	xxx Clearance height for de-aerator extraction	Empty	In operation	Maximum
CSG-HS 020	2500	950	1975	1250	485	920	1000	1200
CSG-HS 055	2750	1100	2050	1300	520	1090	1300	1500
CSG-HS 125	2550	1450	2200	1600	630	1520	1850	2100
CSG-HS 180	3100	1500	2240	2000	630	1700	2150	2500

Indicated dimensions are the maximum dimensions for a specific configuration of the package.

For detailed dimensions of the unit, size and position of the connections, clearance for the tube bundle extraction, weights and other constructive information, refer to the specific general arrangement drawing of the product.

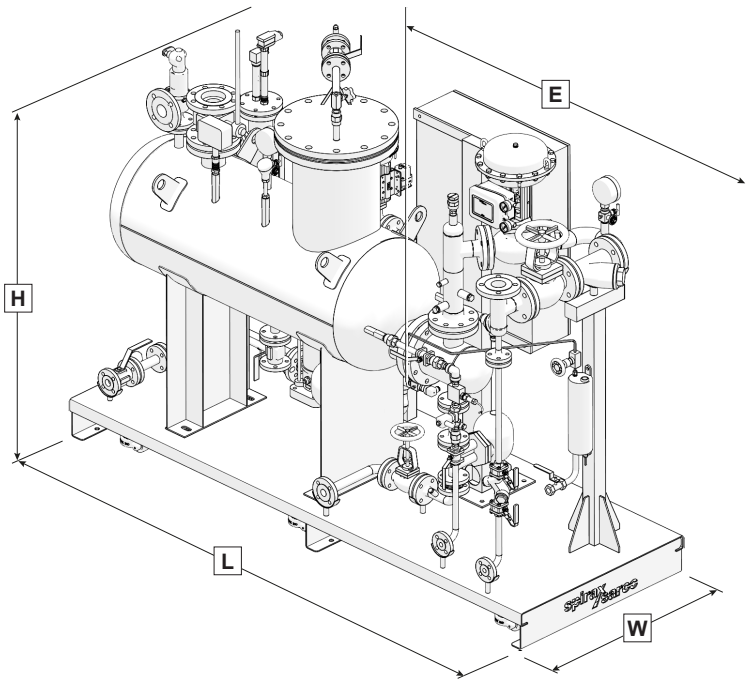

For dimensions and weights in inches and lbs, please go the next page

Dimensions approximate in inches and weights lbs of a standard unit

	Dimensions					Weights		
	L Length	**W** Width	**H** Height	**E** Clearance for tube bundle extraction	xxx Clearance height for de-aerator extraction	Empty	In operation	Maximum
CSG-HS 020	79	33	73	49	19	1610	1830	2161
CSG-HS 055	93	33	73	51	20	2073	2514	2955
CSG-HS 125	96	57	81	63	25	2867	3638	4190
CSG-HS 180	116	57	81	79	25	3418	4520	5402

Dimensions approximate in inches and weights lbs with preheater

	Dimensions					Weights		
	L Length	**W** Width	**H** Height	**E** Clearance for tube bundle extraction	xxx Clearance height for de-aerator extraction	Empty	In operation	Maximum
CSG-HS 020	91	33	73	49	19	1720	1874	2271
CSG-HS 055	104	33	73	51	20	2117	2558	2999
CSG-HS 125	96	57	81	63	25	2867	3638	4190
CSG-HS 180	116	57	81	79	25	3418	4520	5402

Dimensions and weights of the units with EnEV option - insulation 100 mm

	Dimensions					Weights		
	L Length	**W** Width	**H** Height	**E** Clearance for tube bundle extraction	xxx Clearance height for de-aerator extraction	Empty	In operation	Maximum
CSG-HS 020	98	37	78	49	19	2029	2205	2646
CSG-HS 055	108	43	81	51	20	2403	2867	3308
CSG-HS 125	100	57	87	63	25	3352	4079	4631
CSG-HS 180	122	59	88	79	25	3749	4741	5513

Indicated dimensions are the maximum dimensions for a specific configuration of the package.

For detailed dimensions of the unit, size and position of the connections, clearance for the tube bundle extraction, weights and other constructive information, refer to the specific general arrangement drawing of the product.

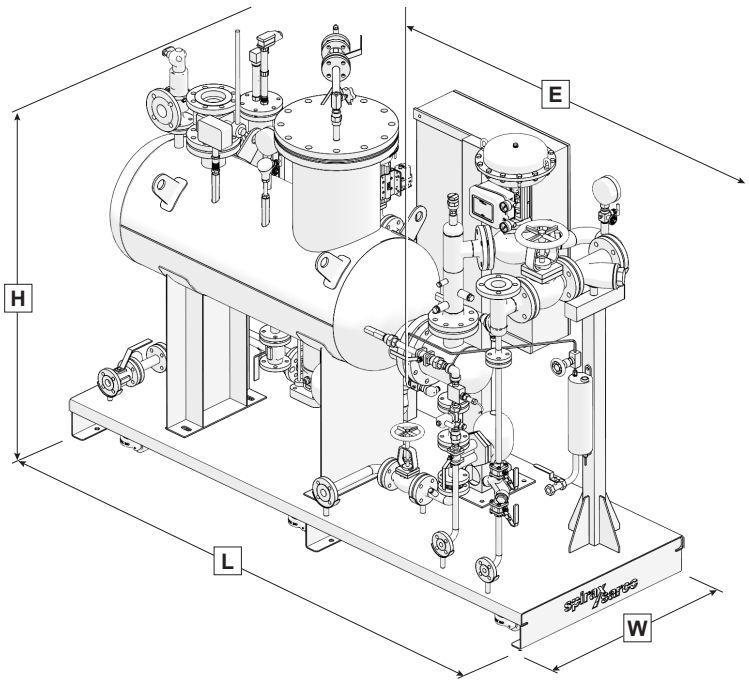

For dimensions and weights in mm and kg, please go the previous page

Connections

	Metric				Imperial			
	020	**055**	**125**	**180**	**020**	**055**	**125**	**180**
Plant steam inlet connection	DN32 PN16	DN50 PN16	DN80 PN16	DN100 PN16	1¼" ANSI 150	2" ANSI 150	3" ANSI 150	4" ANSI 150
Condensate outlet connection	DN25 PN16	DN25 PN16	DN40 PN16	DN40 PN16	1" ANSI 300	1" ANSI 300	1½" ANSI 300	1½" ANSI 300
Clean steam outlet connection	DN50 PN40	DN80 PN40	DN125 PN16	DN150 PN16	2" ANSI 300	3" ANSI 300	5" ANSI 300	6" ANSI 300
Feedwater inlet connection	DN15 PN40	DN20 PN40	DN25 PN40	DN32 PN40	½" ANSI 300	¾" ANSI 300	1" ANSI 300	1¼" ANSI 300
Safety valve discharge	1" G-f	DN50 PN16	DN80 PN16	DN80 PN16	1" NPT	1¼" NPT*	3" NPT	3" NPT
Not condensable vent connection	¼" G-f	¼" G-f	¼" G-f	¼" G-f	¼" NPT	½" NPT	¼" NPT	¼" NPT
Drain connection	DN25 PN40	DN25 PN40	DN25 PN40	DN25 PN40	1" ANSI 300	¾" ANSI 300	1" ANSI 300	1" ANSI 300
Plant steam condensate drain connection	DN15 PN40	DN15 PN40	DN15 PN40	DN15 PN40	½" ANSI 150	½" ANSI 150	½" ANSI 150	½" ANSI 150
TDS Blowdown connection	DN15 PN40	DN15 PN40	DN15 PN40	DN15 PN40	½" ANSI 150	½" ANSI 150	½" ANSI 150	½" ANSI 150
Sampling system (cooling water in/ out - sample out)	½" BSP - 6 mm	½" BSP - 6 mm	½" BSP - 6 mm	½" BSP - 6 mm	½" BSP	½" BSP	½" BSP	½" BSP
Options								

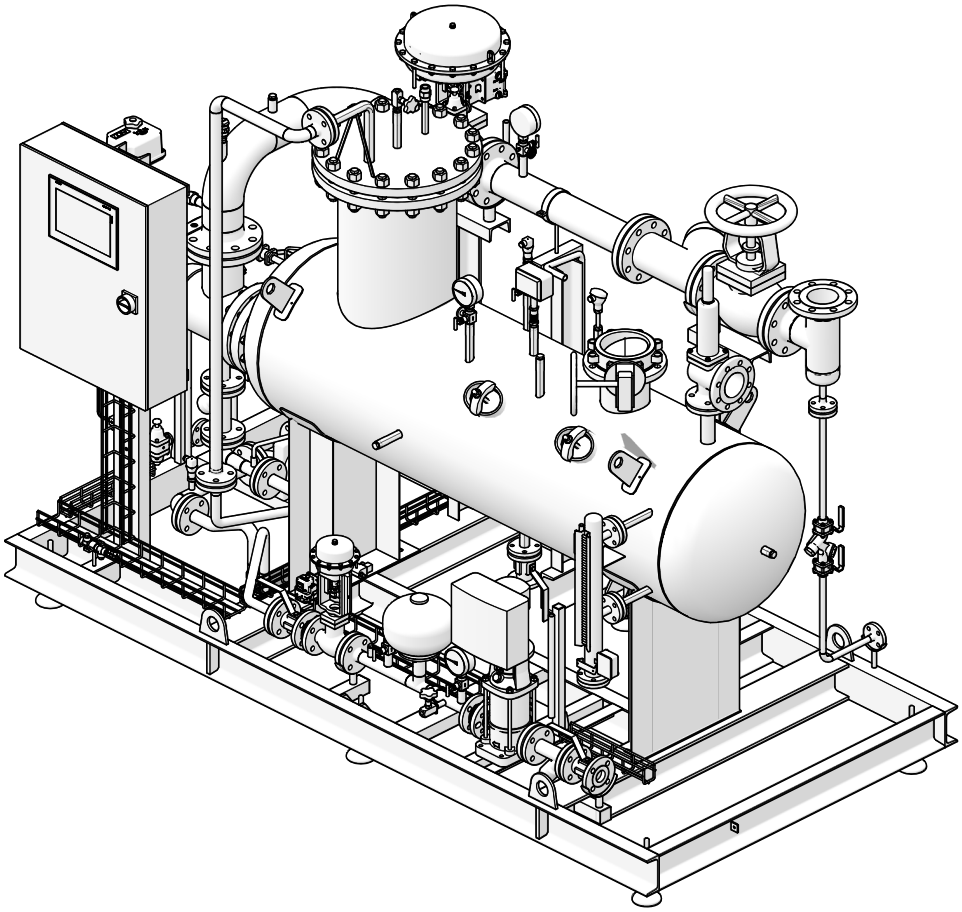

Product nomenclature and selection guide

The product nomenclature is based on the characteristics of the main elements and options, identified as follows:

Basic configuration				
Design code	E	EN		
	A	ASME		
	G	GB		
	J	JBA		
Shell type	F	Flanged openable		
Unit size:	020	Up to 200 kg/h	(441 lbs/hr)	(at the reference operating conditions ^)
	055	Up to 550 kg/h	(1212 lbs/hr)	
	125	Up to 1250 kg/h	(2756 lbs/hr)	
	180	Up to 1800 kg/h	(3968 lbs/hr)	
Valve actuation type	PN	Pneumatic (fail-safe)		
	EL	Electric (fail-safe)		
Control	P1	ABB AC500 series + 7" display		
	P2	Allen-Bradley CompactLogix 1700 series + 7" display		
	P3	Siemens S7.1200 series + 7" display		
	P4	Selective Control Panel (with PLC ABB AC500 series + 7" display)		
Communication interface	C0	None		
	C1	BACnet IP		
	C2	Profinet		
	C3	Modbus TCP/IP		
	C4	BACnet MSTP		
	C5	Profibus		
	C6	Modbus RTU		
	C7	BACnet (BTL cert.) IP		
	C8	BACnet (BTL cert.) MSTP		
Unit frame/Electrical cabinet	0	Base and cabinet made of carbon steel, painted		
	1	Open frame and cabinet made of carbon steel, painted		
	2	Frame w. side panels and cabinet made of carb. steel, painted		
	3	Base and cabinet made of stainless steel (304) *, **		
	4	Open frame and cabinet made of stainless steel (304) *, **		
	5	Frame with side panels and cabinet made of stainless steel (304) *, **		
	7	Seismic, Base and cabinet made of carb. steel, painted		
Control Panel location	S	Side		
Insulation: (aluminium cladding if carbon steel frame and electrical cabinet is selected, stainless steel 304 if stainless steel 304 frame and electrical cabinet is selected)	1	Steam generator body only		
	2	Steam generator and hot piping		
	3	Insulation to EnEV specifcation		
	0	Not insulated		

* This configuration will include pressure safety valve on CSG with body and internals made of stainless steel
** This option/configuration is not allowed with P4 control (Selective Control Panel)

Product nomenclature and selection guide continued on next page

Product nomenclature and selection guide (continued)

Handling wheels and feet	N	None (only plates with anchor holes are provided)
	F	Adjustable feet
	W	Pivoting wheels, lockable, with feet
Plant steam inlet shut-off valve	M	Manual stop valve
	AE	Automatic electric isolation valve**
Plant steam line trapping	N	None
	T	Plant steam line trapping station
TDS control system	1	Timed TDS blowdown
	2	TDS control with external probe (discontinuous metering) **
	3	TDS control system w. internal probe (continuous metering) **
Sampling cooler	N	None
	S	Sample-cooler and sampling valve
Feedwater pressurisation system	N	None (water P > clean steam P + 0,5 bar g)
	P	Pump with VFD **
Independent downstream plant protection	N	None
	L	Self-monitoring low level probe LP30 (available only with LP20) **
	T	Temperature limiter **
Feedwater pre-heating	N	None
	PR	Feed water pre-heating by heat recovery from primary condensate **
Intelligent diagnostics	N	None
	I1	System diagnostics **
	I3	Integrity test **
	I4	System diagnostics + Integrity test **
Clean steam outlet shut-off valve	N	None
	M	Manual stop valve
	AE	Automatic electric isolation valve**
Test and certifications	S	EU PED test and CE marking of the assembly
	U	ASME U stamp
	M	MOM compliance
	K	KGS compliance
	D	DOSH compliance
	GC	GB standard in Chinese language
	GE	GB standard in English language
	SF	None (as assembly)
	R	UKCA
Level indicator	V	Viscorol (Magnetic Level Indicator)
	L	LP20 (Capacitance Level Probe)

** This option/configuration is not allowed with P4 control (Selective Control Panel)

Product nomenclature example

CSG-HS E F 020 - PN P3 C1 - 1 F 2 F - AE T - 3 S P L N I7 - AE S L

Not all configurations are available in every country. Please contact your local Spirax Sarco representative for more details.