Local regulations may restrict the use of this product to below the conditions quoted.
In the interests of development and improvement of the product, we reserve the right to change the specification without notice. © Copyright 2026

APT14, APT14HC and APT14SHC
Automatic Pump Traps

Description
The Spirax Sarco APT14, APT14HC and APT14SHC automatic pump traps are flanged or screwed displacement receivers pressure rated to PN16. The units are capable of automatically trapping or pumping, depending on pipeline conditions. The unit is operated by steam (saturated or superheated) and is used to remove condensate from process plant under all operating conditions including vacuum. For optional extras see 'How to order'.

Definition of Motive Steam
For clarity throughout this document, it is important to note that the term ‘motive steam’ is used to describe both saturated steam and superheated steam.

Design compliance
The shell of the product has been designed in accordance with A.D. Merkblatter/ASME VIII.

Standards
These products fully comply with the requirements of the European Pressure Equipment Directive 2014/68/EU, ATEX Directive and carry the CE and Ex marks when so required.

Certification
These products are available with certification to EN 10204 3.1.
Note: All certification/inspection requirements must be stated at the time of order placement.

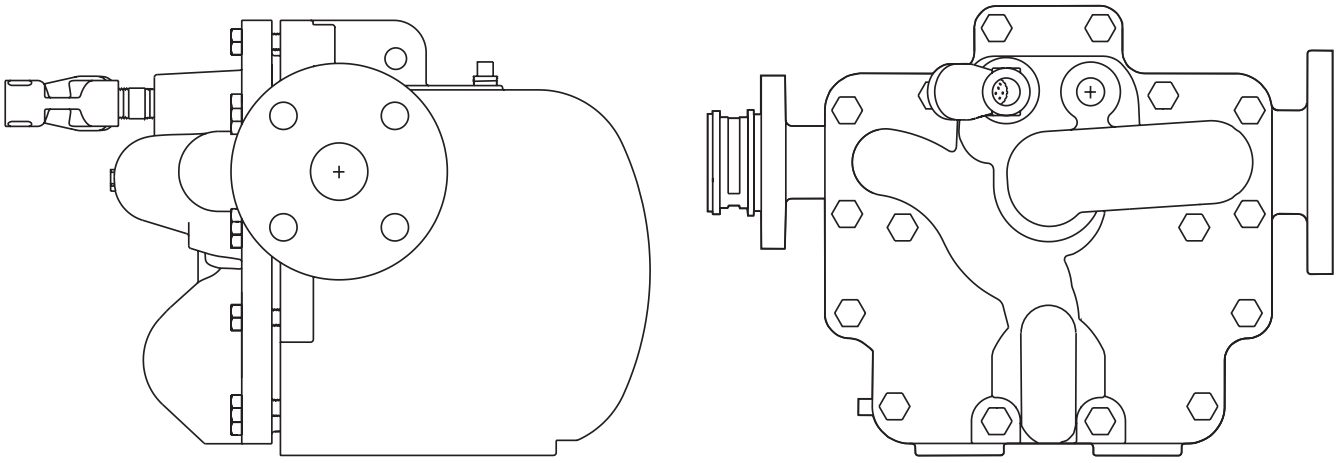

Sizes and pipe connections

Model and body material	Inlet and outlet sizes and pipe connections		Connections					
			Motive / exhaust		Sight glass		Drain	
APT14 SG iron	Flanged DN40 inlet x DN25 outlet	EN 1092 PN16	BSP T Rp (ISO 7-1) or NPT	DN15 (½")	BSP T Rp (ISO 7-1)	DN15 (½")	BSP T Rp (ISO 7-1)	DN10 (⅜")
		ASME B 16.5 150	NPT		NPT		NPT	
		JIS 10 (JIS B 2210)	BSP T Rp (ISO 7-1)		BSP T Rp (ISO 7-1)		BSP T Rp (ISO 7-1)	
		KS 10 (KS B 1511)	BSP T Rp (ISO 7-1)		BSP T Rp (ISO 7-1)		BSP T Rp (ISO 7-1)	
	Screwed 1½" inlet x 1" outlet	BSP T Rp (ISO 7-1)	BSP T Rp (ISO 7-1)		BSP T Rp (ISO 7-1)		BSP T Rp (ISO 7-1)	
		NPT	NPT		NPT		NPT	
APT14HC SG iron	Flanged DN50 inlet x DN40 outlet	EN 1092 PN16	BSP T Rp (ISO 7-1)		BSP T Rp (ISO 7-1)		BSP T Rp (ISO 7-1)	
		ASME B 16.5 150	NPT		NPT		NPT	
APT14SHC Carbon steel		JIS 10 (JIS B 2210)	BSP T Rp (ISO 7-1)		BSP T Rp (ISO 7-1)		BSP T Rp (ISO 7-1)	
		KS 10 (KS B 1511)	BSP T Rp (ISO 7-1)		BSP T Rp (ISO 7-1)		BSP T Rp (ISO 7-1)	

Pressure/temperature limits - APT14 and APT14HC (SG iron)

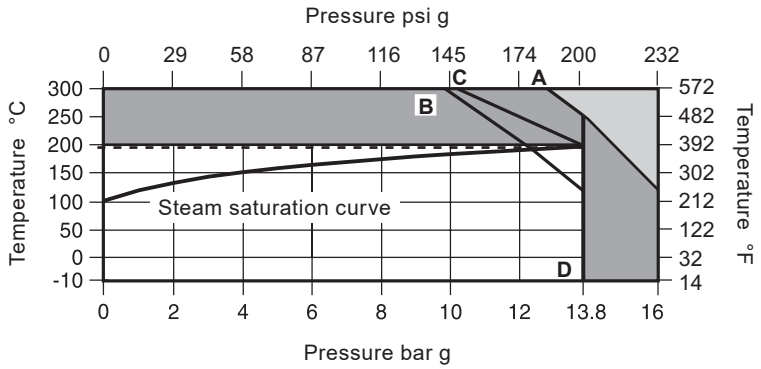

The product **must not** be used in this region.

The product should not be used in this region or beyond its operating range as damage to the internals may occur.

- - - - - Superheated steam should not exceed the following parameters: 13.8 bar g @ 198 °C (200 psi g @ 388 °F)

A - D Flanged PN16.

B - D Flanged JIS/KS 10.

C - D Flanged ASME 150.

Body design conditions			PN16
Maximum motive inlet pressure		13.8 bar g	200 psi g
PMA	Maximum allowable pressure	16 bar g @ 120 °C	232 psi g @ 248 °F
TMA	Maximum allowable temperature	300 °C @ 12.8 bar g	572 °F @ 186 psi g
Minimum allowable temperature **Note:** For lower temperatures consult Spirax Sarco.		-10 °C	14 °F
PMO	Maximum operating pressure for saturated and superheated steam service	13.8 bar g @ 198 °C	200 psi g @ 388 °F
Maximum backpressure for standard pumps (for higher backpressures contact Spirax Sarco)		5 bar g	73 psi g
TMO	Maximum operating temperature for saturated and superheated steam service	198 °C @ 13.8 bar g	388 °F @ 200 psi g
Temperature limits (Ambient ⟨Ex⟩)		-10 °C to 200 °C	14 °F to 392 °F
Product is safe for use under full vacuum conditions			
Designed for a maximum cold hydraulic test pressure of:		24 bar g	348 psi g
Filling/ Installation	Recommended filling head above the pump (from the base of the receiver / process)	0.3 m	1 ft
	Maximum recommended installation (from the base of the pump) for higher installation heads refer to Spirax Sarco	1 m	3.2 ft
	Minimum installation head required (from the base of the pump)	0.2 m	0.7 ft

Pressure/temperature limits - APT14SHC (carbon steel)

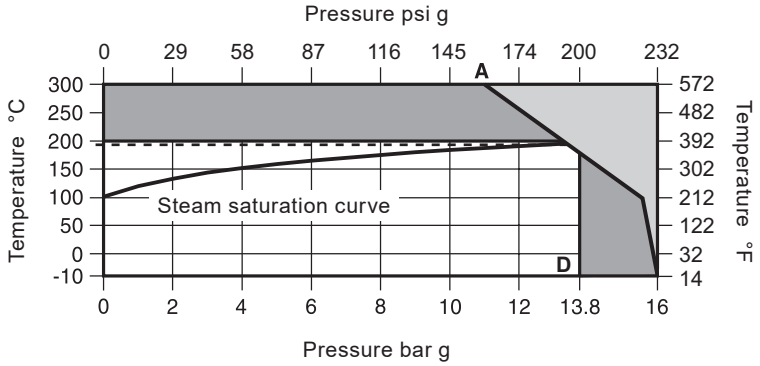

The product **must not** be used in this region.

The product should not be used in this region or beyond its operating range as damage to the internals may occur.

A - D Flanged PN16.

- - - - - Superheated steam should not exceed the following parameters: 13.8 bar g @ 198 °C (200 psi g @ 388 °F)

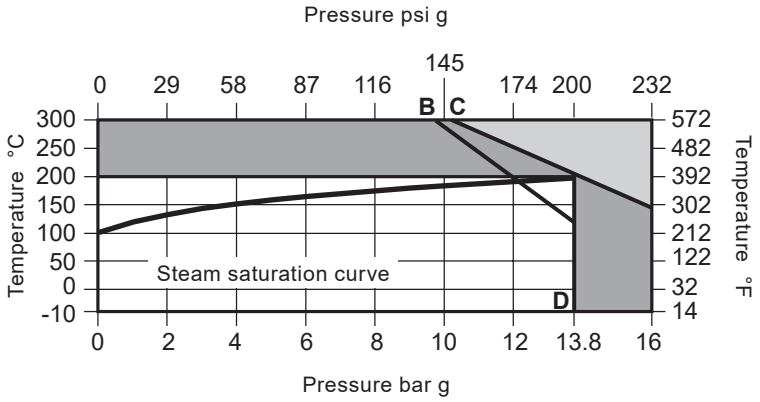

The product **must not** be used in this region.

The product should not be used in this region or beyond its operating range as damage to the internals may occur.

B - D Flanged JIS/KS 10.

C - D Flanged ASME 150.

Body design conditions			PN16
Maximum motive inlet pressure		13.8 bar g	200 psi g
PMA	Maximum allowable pressure	16 bar g @ 120 °C	232 psi g @ 248 °F
TMA	Maximum allowable temperature	300 °C @ 12.8 bar g	572 °F @ 186 psi g
Minimum allowable temperature **Note:** For lower temperatures consult Spirax Sarco.		-10 °C	14 °F
PMO	Maximum operating pressure for saturated and superheated steam service	13.8 bar g @ 198 °C	200 psi g @ 388 °F
Maximum backpressure for standard pumps (for higher backpressures contact Spirax Sarco)		5 bar g	73 psi g
TMO	Maximum operating temperature for saturated and superheated steam service	198 °C @ 13.8 bar g	388 °F @ 200 psi g
Temperature limits (Ambient ⟨Ex⟩)		-10 °C to 200 °C	14 °F to 392 °F
Product is safe for use under full vacuum conditions			
Designed for a maximum cold hydraulic test pressure of:		24 bar g	348 psi g
Filling/ Installation	Recommended filling head above the pump (from the base of the receiver / process)	0.3 m	1 ft
	Maximum recommended installation (from the base of the pump) for higher installation heads refer to Spirax Sarco	1 m	3.2 ft
	Minimum installation head required (from the base of the pump)	0.2 m	0.7 ft



Warning 1
Consideration of Condensate Temperature Increase
In situations where the temperature of the motive steam is considerably higher than that of the condensate, it is important that the design of the system located downstream of the pump adequately addresses this temperature difference.



Warning 2
Control of Motive Pressure and Risk Assessment
It is essential to implement reliable and effective control of the motive pressure supplied to the pump. This control is necessary to ensure that the temperatures within the system do not exceed the maximum allowable temperature limits specified for the equipment.



Warning 3
Steam Backflow Risk and Upstream Device Rating
There is a risk of steam backflow through the balance line in systems utilising the APT14 pump. To mitigate this risk, it is strongly advised that the device situated upstream of the pump is specified to withstand the temperature of the steam employed as motive steam. This precaution is particularly crucial in installations where a second steam line—be it superheated or saturated steam—is introduced to the system.



Warning 4
Specification of Sight Glass
When specifying a sight glass for the system, it is imperative that the component is capable of withstanding the maximum temperature gradient that the pump may encounter during operation. This temperature gradient is defined as the difference between the highest possible steam temperature and the temperature of the coldest condensate present in the system.

It is the responsibility of the user to conduct an appropriate level of risk assessment for the application. This assessment should ensure that all necessary precautions are in place and that the system operates within safe parameters at all times.

Materials

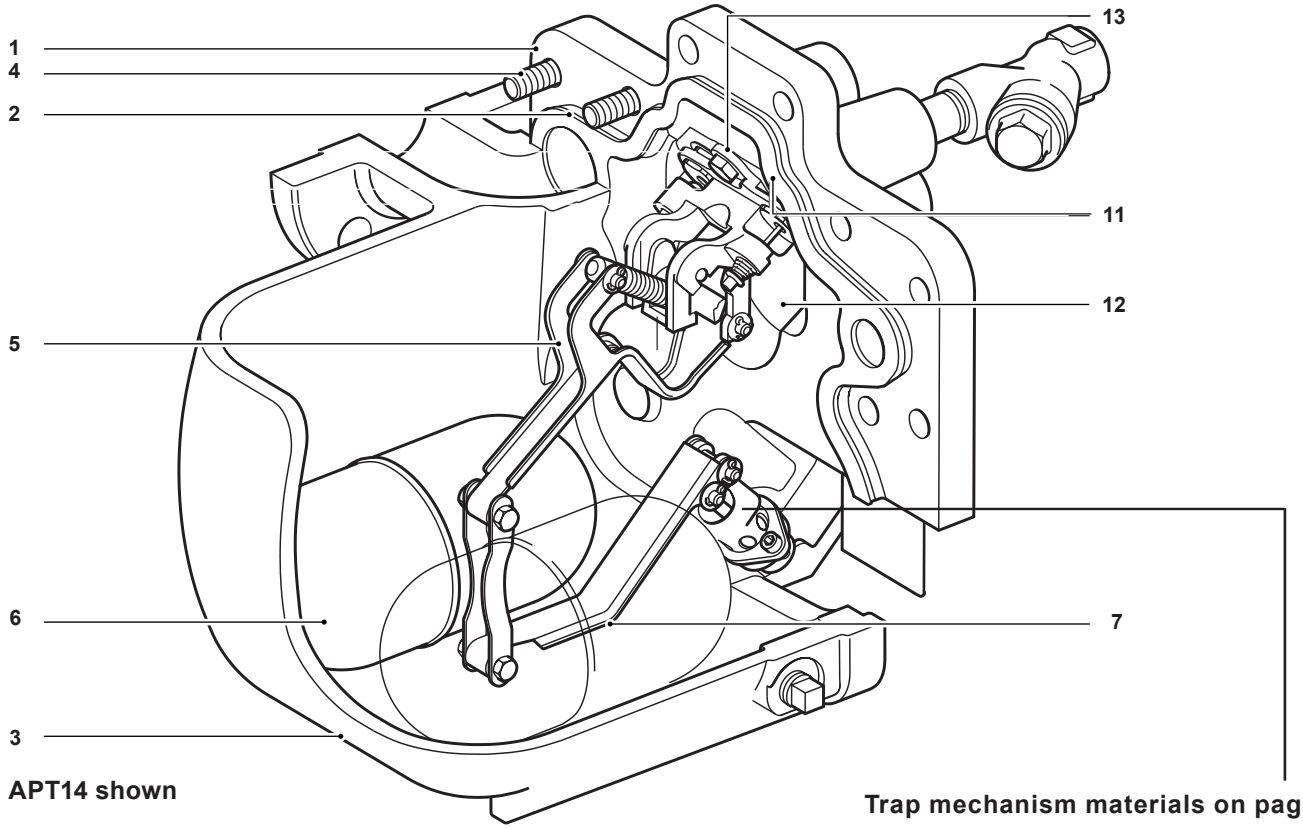

APT14 shown

Trap mechanism materials on page 8

No.	Part		Material	
1	Cover	APT14	SG iron	EN JS 1025 or ASTM A395
		APT14HC	SG iron	EN JS 1025 or ASTM A395
		APT14SHC	Carbon steel	EN 1.0619+N or ASTM A216 WCB
2	Cover gasket	APT14	Graphite laminated with stainless steel insert	
		APT14HC	Graphite laminated with stainless steel insert	
		APT14SHC	Novapit SSTC expanded graphite laminated with stainless steel insert	
3	Body	APT14	SG iron	EN JS 1025 or ASTM A395
		APT14HC	SG iron	EN JS 1025 or ASTM A395
		APT14SHC	Carbon steel	EN 1.0619+N or ASTM A216 WCB
4	Cover bolts		Stainless steel	ISO 3506 Gr. A2 70
	Location pins	APT14SHC only	Stainless steel	304
5	Pump lever		Stainless steel	BS 1449 304 S15
6	Float		Stainless steel	BS 1449 304 S15
7	Trap lever		Stainless steel	BS 1449 304 S15
11	Seat (inlet check valve)		Stainless steel	AISI 420
12	Flap (inlet check valve)		Stainless steel	BS 3146 ANC 4B
13	Pump mechanism bracket		Stainless steel	BS 3146 ANC 4B

Materials continued on next page

Materials (continued)

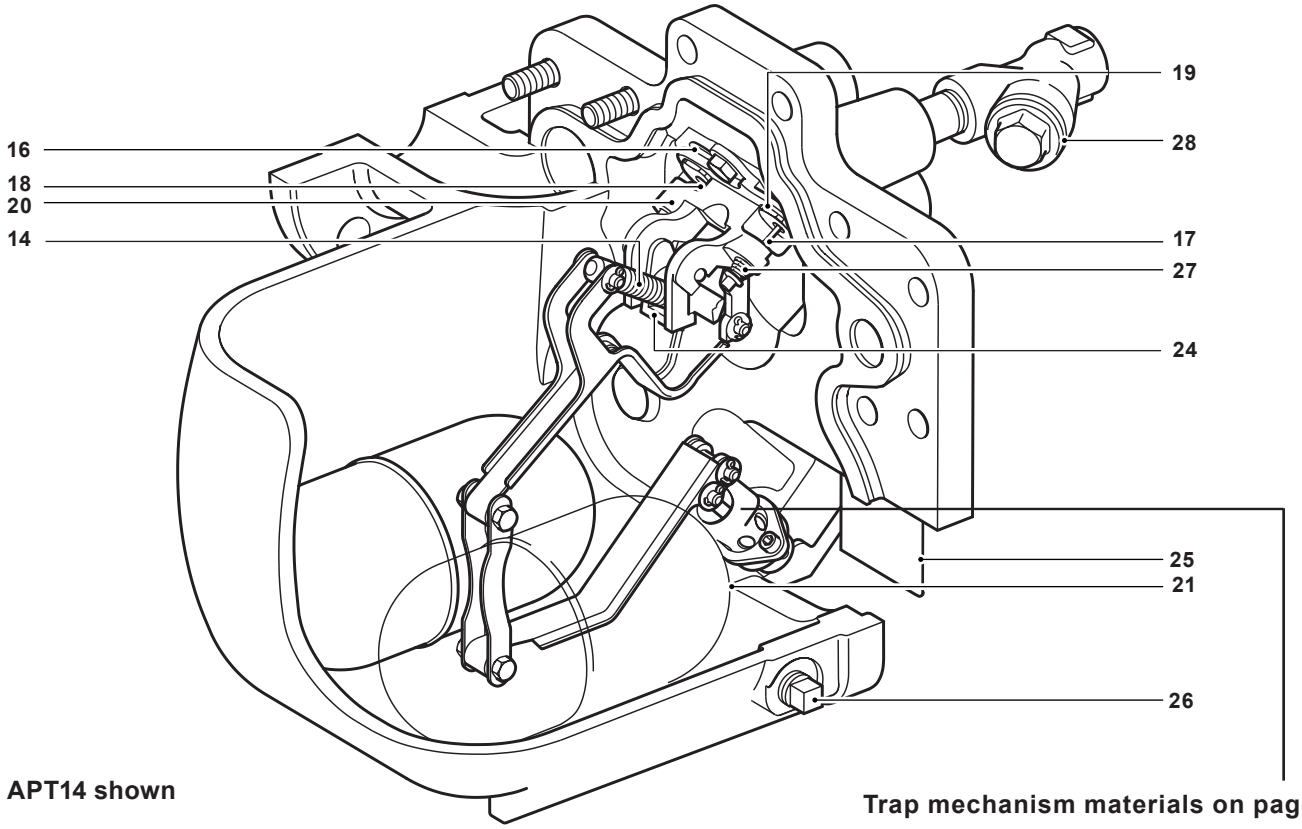

APT14 shown

Trap mechanism materials on page 8

No.	Part		Material	
14	Spring (pump)		Stainless steel	BS 2056 302 S26 Gr. 2
16	Exhaust seat		Stainless steel	BS 970 431 S29 or ASTM A276 431
17	Inlet valve and seat assembly		Stainless steel	
18	Exhaust valve		Stainless steel	BS 3146 ANC 2
19	Valve seat gasket		Stainless steel	BS 1449 409 S19
20	Pump mechanism bolt		Stainless steel	ISO 3506 Gr. A2 70
24	Actuator arm		Stainless steel	BS 3146 ANC 2
25	Name-plate		Stainless steel	BS 1449 304 S16
26	Drain plug		Steel	DIN 17440 1.4571
27	Inlet valve spring		Stainless steel	
28	Motive strainer	APT14	SG iron	
		APT14HC	SG iron	
		APT14SHC	Carbon steel	
29	DCV10 (APT14HC and APT14SHC)		Stainless steel (not shown)	

Materials for the trap mechanism

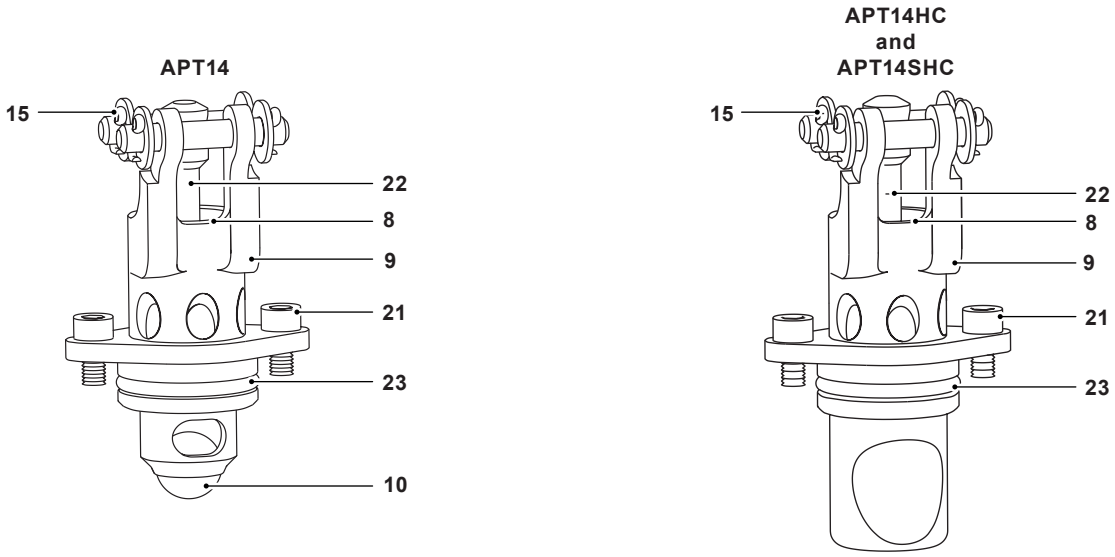

No.	Part	Material	
8	Trap 2nd stage valve	Stainless steel	ASTM A276 440 B
9	Trap housing	Stainless steel	BS 3146 ANC 2
10	Ball (APT14 only)	Stainless steel	ASTM A276 440 B
15	Split pin	Stainless steel	BS 1574
21	Trap housing bolt	Stainless steel	BS 6105 A4 80
22	Trap 1st stage valve	Stainless steel	BS 970 431 S29 or ASTM A276 431
23	'O' ring	EPDM	

Dimensions/weightS (approximate) in mm (inches) and kg (lbs)

Withdrawal distance

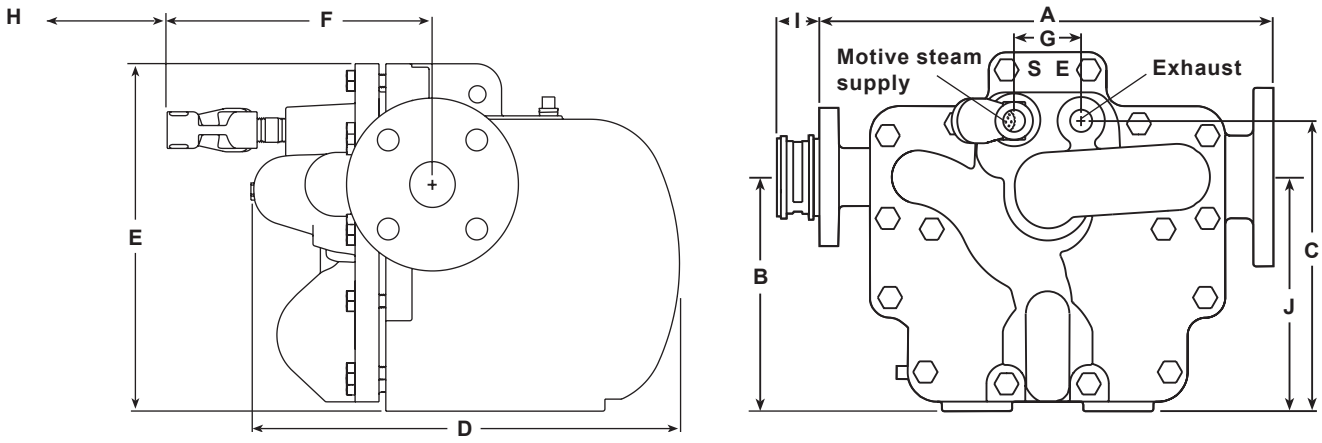

Model	Connection	A*				B	C	D	E	F	G
		BSP T Rp (ISO 7-1)/NPT	PN16	JIS/KS10	ASME						
APT14	**Screwed**	350 (13.8)	389 (15.3)	385 (15.1)	386.5 (15.2)	198 (7.7)	246 (9.68)	385 (15.1)	304 (11.9)	258 (10.1)	57 (2.24)
APT14HC	**Flanged**		479 (18.9)	473 (18.6)	477.5 (18.8)		270 (10.6)	400 (15.7)	335 (13.1)	261 (10.2)	
APT14SHC	**Flanged**		552 (21.7)	546 (21.4)	544 (21.1)	206 (8.11)	278 (10.9)	407 (16)	351 (13.8)		

Model	Connection	H	I*				J	Weight
			Screwed BSP T Rp (ISO 7-1)/NPT	Flanged PN16	Flanged JIS/KS10	Flanged ASME		
APT14	**Screwed**	250 (9.8)					198 (7.8)	45 (99)
APT14HC	**Flanged**	275 (10.8)		31.5 (1.2)	31.5 (1.2)	45 (1.8)		65 (143)
APT14SHC	**Flanged**						206 (8.11)	105 (232)

* Not including the gasket between APT pump and check valve

Nominal capacities

For full capacity details for a specific application consult Spirax Sarco. To accurately size the pump trap, the following data is required.

1. Installation head available, from the base of the pump trap to the centre line of the heat exchanger/process condensate outlet (m). If the outlet is mounted vertically, then this should be from the base of the pump to the face of the outlet.
2. Motive steam pressure available to power the pump trap (bar g).
3. Total backpressure in the condensate return system (bar g).
4. Heat exchanger full-load operating pressure (bar g).
5. Heat exchanger maximum steam load (kg / h).
6. Minimum temperature of secondary fluid (°C).
7. Maximum controlled temperature of secondary fluid (°C).

Model	APT14	APT14HC and APT14SHC
Pump discharge/cycle	5 litres (1.3 gallons)	8 litres (2.1 gallons)

Safety information, installation and maintenance

For full details see the Installation and Maintenance Instructions (IM-P612-04) supplied with the product.

How to specify

APT14 and APT14HC

The pump trap shall be a Spirax Sarco automatic pump trap type APT14 operated by steam to 13.8 bar g (200 psi g). No electrical energy shall be required. Body construction from SG iron (EN JS 1025 dual certified with ASTM A395) with a swing type inlet check valve (APT14 and APT14HC) and ball type outlet check valve (APT14 only). The internal trap mechanism shall contain dual stainless steel floats connected with a two stage trap, while the internal pump mechanism shall be a stainless steel single tension spring snap-action device with no external seals or glands.

APT14SHC

The pump trap shall be a Spirax Sarco automatic pump trap type APT14SHC operated by steam to 13.8 bar g. No electrical energy shall be required. Body construction from carbon steel (EN 1.0619 dual certified with ASTM A216 WCB) with a swing type inlet check valve. The internal trap mechanism shall contain dual stainless steel floats connected with a two stage trap, while the internal pump mechanism shall be a stainless steel single tension spring snap-action device with no external seals or glands.

How to order

Example: 1 off Spirax Sarco automatic pump trap, type APT14, DN40 x DN25, flanged EN 1092 PN16 with BSP T Rp (ISO 7-1) motive fluid connections.

Optional extras

Both the APT14 and APT14HC are available with the **body and cover coated with electroless nickel plate (ENP)**. This option, when required, will be denoted as **APT14 ENP** and **APT14HC ENP** respectively and must be stated at the time of order placement.

The APT14, APT14HC and APT14SHC are available with the body drilled, tapped and plugged to accept sight level gauges. **Note:** Sight level gauges can not be fitted retrospectively to the standard APT14, APT14HC or APT14SHC.

Spare parts

The spare parts available are shown in solid outline. Parts drawn in a grey line are not supplied as spares.

A

Cover assembly (APT14 shown)

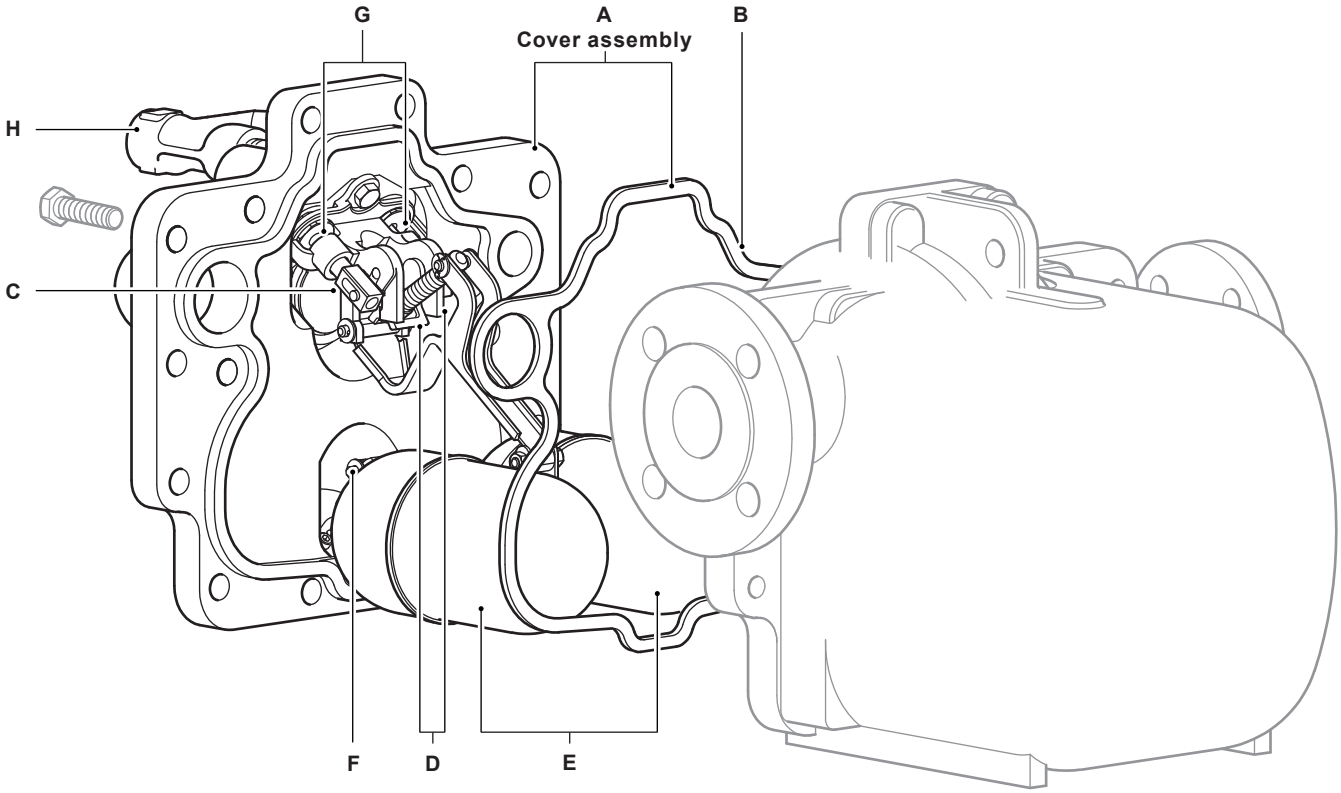

Available spares

A	Cover assembly (**A - G** inclusive)	**1, 2, 5-25**
B	Cover gasket	**2**
C	Inlet check valve	**2, 12**
D	Spring and actuator arm	**2, 14, 24**
E	Floats	**2, 5, 6, 7**
F	Trap and outlet check valve mechanism	**2, 8, 9, 10** (APT14 only)**, 21, 22, 23**
G	Inlet/exhaust valve and seat kit	**2, 16, 17, 18, 19, 27**
H	See separate literature: For the **APT14** or **APT14HC** see TI-P163-01 and for the **APT14SHC** see TI-P063-02	**28**
DCV10 outlet check valve (APT14HC and APT14SHC only). See separate literature TI-P601-32		**29**

Please note:
For customer convenience, spares are supplied in kits to ensure all the appropriate replacement parts are available e.g. when an inlet/exhaust valve and seat assembly is ordered, all replacement split pins, washers and gaskets will be provided in addition to the key components listed.

How to order spares
Always order spares by using the description given in the column headed 'Available spares' and state the size and type of unit.

Example: 1 off Inlet/exhaust valve and seat kit for a Spirax Sarco DN40 x DN25 APT14 automatic pump trap.

Available spares continued on next page

B
Cover gasket

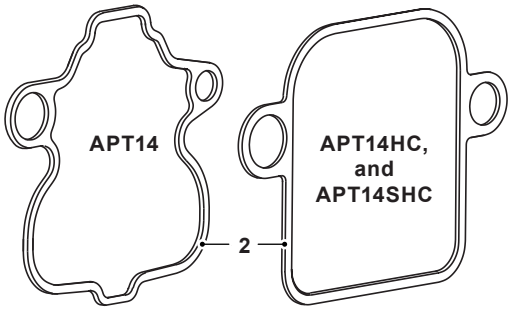

C
Inlet check valve

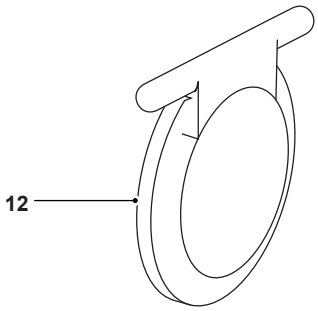

D
Spring and actuator arm

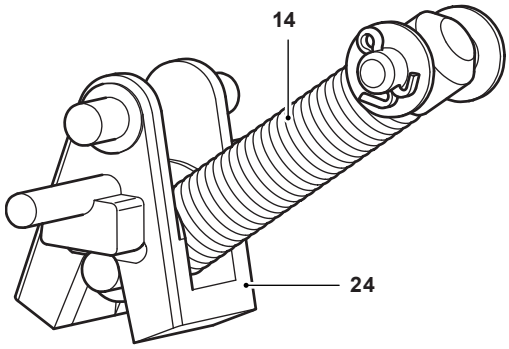

E
Floats

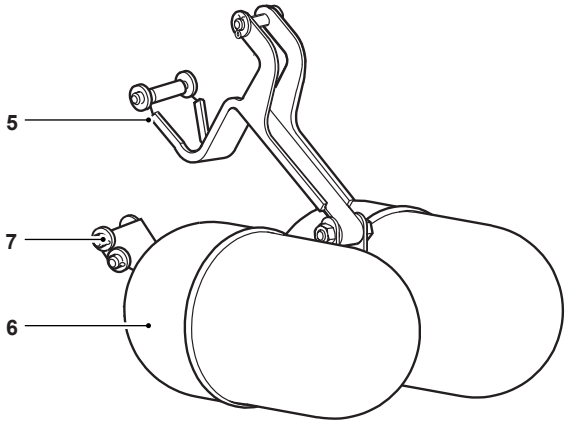

A	Cover assembly (**A - G** inclusive)	**1, 2, 5-25**
B	Cover gasket	**2**
C	Inlet check valve	**2, 12**
D	Spring and actuator arm	**2, 14, 24**
E	Floats	**2, 5, 6, 7**

Available spares continued on next page

Available spares (continued)

F
Trap and outlet check valve mechanism
Note: Item **10** is not included for the APT14HC and APT14SHC

APT14

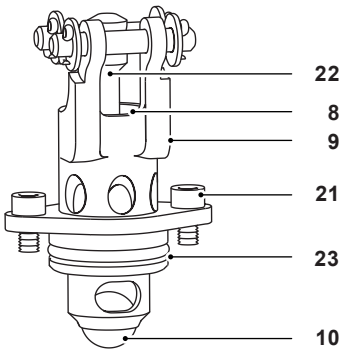

APT14HC and APT14SHC

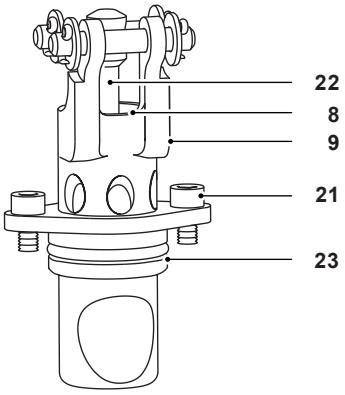

G
Inlet/exhaust valve and seat kit

APT14

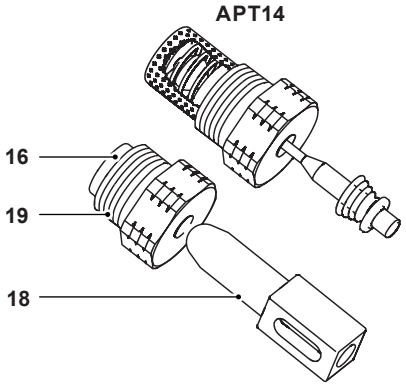

APT14HC and APT14SHC

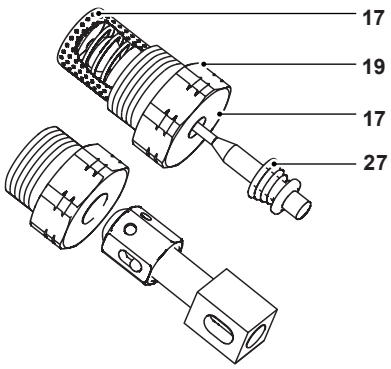

F	Trap and outlet check valve mechanism	**2, 8, 9, 10** (APT14 only)**, 21, 22, 23**
G	Inlet/exhaust valve and seat kit	**2, 16, 17, 18, 19, 27**