Spira-trol™
K and L Series
Two-port Control Valves
Installation and Maintenance Instructions

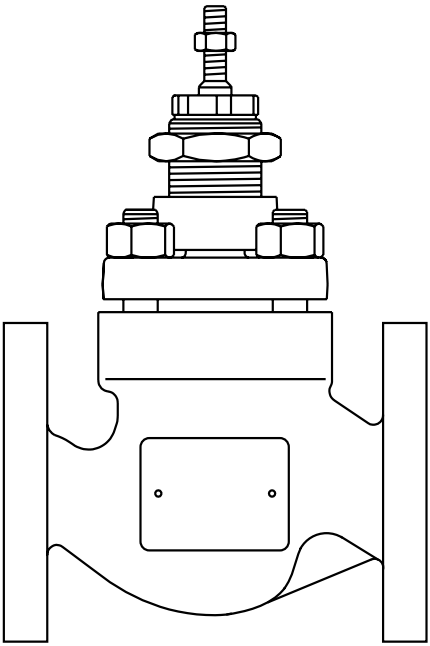

© Copyright 2026
Printed in France

Contents

1. Safety information 4

2. General product information 15

2.1 General description

2.2 Technical data 16

2.3 Pressure/temperature limits - KE43 (Carbon steel) 18

2.4 Pressure/temperature limits - KE61 and KE63 (Stainless steel) 20

2.5 Pressure/temperature limits - KE71 and KE73 (SG iron) 22

2.6 Pressure/temperature limits - KEA41, KEA42 and KEA43 (Carbon steel) 24

2.7 Pressure/temperature limits - KEA61, KEA62 and KEA63 (Stainless steel) 26

2.8 Pressure/temperature limits - KEA71 and KEA73 (SG iron) 28

2.9 Pressure/temperature limits - LE31 and LE33 (Cast iron valve body) 30

2.10 Pressure/temperature limits - LE43 (Carbon steel valve body) 32

2.11 Pressure/temperature limits - LE63 (Stainless steel valve body) 34

2.12 Pressure/temperature limits - LEA31 and LEA33 (Cast Iron valve body) 36

2.13 Pressure/temperature limits - LEA43 (Carbon steel valve body) 38

2.14 Pressure/temperature limits - LEA63 (Stainless steel valve body) 40

3. Installation 42

4. Maintenance 44

4.1 Safety information

4.2 General 45

4.3 Removal of valve bonnet 46

4.4 Replacement of PTFE gland packings 47

4.5 Replacement of graphite gland packing 48

4.6 Removal and refitting of the valve plug / stem assembly and seat 52

4.7 Refitting the bonnet 54

4.8 Bellows sealed valves 56

4.9 Balanced valves 58

5. Spare parts 62

5.1 Spare parts - DN15 to DN100 Spira-trol™

5.2 Spare parts - Spira-trol™ with bellows seal 64

5.3 Spare parts - Spira-trol™ STEAM TIGHT 66

5.4 Spare parts - DN125 to DN300 Spira-trol™ unbalanced valve 68

5.5 Spare parts - DN125 to DN300 Spira-trol™ balanced 70

6. Fault finding 72

1. Safety information

Safe operation of these products can only be guaranteed if they are properly installed, commissioned, used and maintained by qualified personnel (see Section 1.11) in compliance with the operating instructions. General installation and safety instructions for pipeline and plant construction, as well as the proper use of tools and safety equipment must also be complied with.

Safety note - Handling precautions

PTFE
Within its working temperature range PTFE is a completely inert material, but when heated to its sintering temperature it gives rise to gaseous decomposition products or fumes which can produce unpleasant effects if inhaled. The inhalation of these fumes is easily prevented by applying local exhaust ventilation to atmosphere as near to their source as possible.
Smoking should be prohibited in workshops where PTFE is handled because tobacco contaminated with PTFE will during burning give rise to polymer fumes. It is therefore important to avoid contamination of clothing, especially the pockets, with PTFE and to maintain a reasonable standard or personal cleanliness by washing hands and removing any PTFE particles lodged under the fingernails.

1.1 Intended use

Referring to the Installation and Maintenance Instructions, name-plate and Technical Information Sheet, check that the product is suitable for the intended use/application.
The products listed on pages 4 to 10 comply with the requirements of the EU Pressure Equipment Directive 2014/68/EU and carry the CE mark when so required and fall within the Pressure Equipment Directive categories stated.

i) **The products have been specifically designed for use with liquids and gases which are in Group 2 of the above mentioned Pressure Equipment Directive.The products' use on other fluids may be possible but, if this is contemplated, Spirax Sarco should be contacted to confirm the suitability of the product for the application being considered.**
For applications involving fluids other than steam, water and condensate, the suitability of materials in contact with the process fluid shall be verified in accordance with the latest approved Material and Chemical Compatibility Assessment Chart. PED fluid classification (Group 1 / Group 2) shall not be considered as evidence of material compatibility.

ii) **Check material suitability, pressure and temperature and their maximum and minimum values. If the maximum operating limits of the product are lower than those of the system in which it is being fitted, or if malfunction of the product could result in a dangerous overpressure or overtemperature occurrence, ensure a safety device is included in the system to prevent such over-limit situations.**

iii) **Determine the correct installation situation and direction of fluid flow.**

iv) **Spirax Sarco products are not intended to withstand external stresses that may be induced by any system to which they are fitted. It is the responsibility of the installer to consider these stresses and take adequate precautions to minimise them.**

v) **Remove protection covers from all connections, where appropriate, before installation on steam or other high temperature applications.**

vi) **Prior to use, the user shall ensure the fluid compatibility with the equipment material.**

Product			Group 1 Gases	Group 2 Gases	Group 1 Liquids	Group 2 Liquids
ALL	ALL	DN15-DN25	SEP	SEP	SEP	SEP
LE and LEA3	PN16**	DN32-50	1	SEP	SEP	SEP
	PN16	DN65-100	2	1	SEP	SEP
	ASME125***	DN32-DN65	1	SEP	SEP	SEP
	ASME125	DN80-DN100	2	1	SEP	SEP
KE and KEA7	PN25**	DN32-DN40	1	SEP	SEP	SEP
	ASME125	DN32-DN50	1	SEP	SEP	SEP
	ASME250***	DN32	2	SEP	SEP	SEP
	ASME250***	DN40-DN50	2	1	SEP	SEP
	JIS/KS10	DN50	1	SEP	SEP	SEP
	PN25**	DN50	2	1	SEP	SEP
	ALL EXCEPT ASME250	DN65-DN80	2	1	SEP	SEP
	ASME250	DN65-100	2	1	2	SEP
	ASME125	DN100	2	1	SEP	SEP
	JIS/KS10	DN100-DN125	2	1	SEP	SEP
	PN16	DN100-DN125	2	1	SEP	SEP
	PN25	DN100-DN125	2	1	2	SEP
	JIS/KS10	DN150-DN200	2	1	2	SEP
	PN16	DN150-DN200	2	1	2	SEP
	PN25	DN150-DN200	3	2	2	SEP

** Incuding Screwed BSP

*** Including Screwed NPT

Table continued on next page

Product			Group 1 Gases	Group 2 Gases	Group 1 Liquids	Group 2 Liquids
KE and KEA4 LE and LEA4	ASME150	DN32-DN50	1	SEP	SEP	SEP
	ASME150	DN65-DN100	2	1	SEP	SEP
	ASME150	DN150-DN200	2	1	2	SEP
	ASME150	DN250	3	2	2	SEP
	ASME150	DN300	3	3	2	1
	JIS/KS10	DN32-DN50	1	SEP	SEP	SEP
	JIS/KS10	DN65-DN125	2	1	SEP	SEP
	JIS/KS10	DN150-DN250	2	1	2	SEP
	JIS/KS10	DN300	3	2	2	SEP
	PN16	DN65-DN125	2	1	SEP	SEP
	PN16	DN150-DN200	2	1	2	SEP
	PN16	DN250-DN300	3	2	2	SEP
	JIS/KS20	DN32	2	SEP	SEP	SEP
	JIS/KS20	DN40-DN50	2	1	SEP	SEP
	JIS/KS20	DN65-DN100	2	1	2	SEP
	JIS/KS20	DN125-DN200	3	2	2	SEP
	JIS/KS20	DN250	3	2	2	1
	JIS/KS20	DN300	3	3	2	1
	PN25	DN200	3	2	2	SEP
	PN25	DN250	3	2	2	1
	PN25	DN300	3	3	2	1
	PN40	DN32	2	SEP	SEP	SEP
	PN40	DN40-DN50	2	1	SEP	SEP
	PN40	DN65-DN100	2	1	2	SEP
	PN40	DN125-DN200	3	2	2	SEP
	PN40	DN250	3	2	2	1
	PN40	DN300	3	3	2	1
	ASME300*	DN32	2	SEP	SEP	SEP
	ASME300*	DN40-DN100	2	1	2	SEP
	ASME300	DN150-DN200	3	2	2	SEP
	ASME300	DN250	3	2	2	1
	ASME300	DN300	3	3	2	1

* Including Screwed NPT and SW

Table continued on next page

Product			Group 1 Gases	Group 2 Gases	Group 1 Liquids	Group 2 Liquids
KE and KEA6 LE and LEA6	ASME150	DN32-DN50	1	SEP	SEP	SEP
	ASME150	DN65-DN100	2	1	SEP	SEP
	ASME150	DN150-DN200	2	1	2	SEP
	JIS/KS10	DN32-DN50	1	SEP	SEP	SEP
	JIS/KS10	DN65-DN125	2	1	SEP	SEP
	JIS/KS10	DN150-DN200	2	1	2	SEP
	PN16	DN65-DN125	2	1	SEP	SEP
	PN16	DN150-DN200	2	1	2	SEP
	JIS/KS20	DN32	2	SEP	SEP	SEP
	JIS/KS20	DN40-DN50	2	1	SEP	SEP
	JIS/KS20	DN65-DN100	2	1	2	SEP
	JIS/KS20	DN125-DN200	3	2	2	SEP
	PN25	DN200	3	2	2	SEP
	PN40**	DN32	2	SEP	SEP	SEP
	PN40**	DN40-DN50	2	1	SEP	SEP
	PN40	DN65-DN100	2	1	2	SEP
	PN40	DN125-DN200	3	2	2	SEP
	ASME300*	DN32	2	SEP	SEP	SEP
	ASME300*	DN40	2	1	SEP	SEP
	ASME300*	DN50-DN100	2	1	2	SEP
	ASME300	DN150-DN200	3	2	2	SEP

* Including Screwed NPT and SW

** Incuding Screwed BSP

*** Including Screwed NPT

1.2 Storage

If the product is to be stored, it must be done so in the original packaging with protective covers in place in order to prevent the ingress of particles that could affect performance. Store in an area free from large temperature fluctuations or high humidity in order to prevent corrosion.

1.3 Access

Ensure safe access and if necessary a safe working platform (suitably guarded) before attempting to work on the product. Arrange suitable lifting gear if required.

1.4 Lighting

Ensure adequate lighting, particularly where detailed or intricate work is required.

1.5 Hazardous liquids or gases in the pipeline

Consider what is in the pipeline or what may have been in the pipeline at some previous time. Consider: flammable materials, substances hazardous to health, extremes of temperature.

1.6 Hazardous environment around the product

Consider: explosion risk areas, lack of oxygen (e.g. tanks, pits), dangerous gases, extremes of temperature, hot surfaces, fire hazard (e.g. during welding), excessive noise, moving machinery.

1.7 The system

Consider the effect on the complete system of the work proposed. Will any proposed action (e.g. closing isolation valves, electrical isolation) put any other part of the system or any personnel at risk?

Dangers might include isolation of vents or protective devices or the rendering ineffective of controls or alarms. Ensure isolation valves are turned on and off in a gradual way to avoid system shocks.

1.8 Pressure systems

Ensure that any pressure is isolated and safely vented to atmospheric pressure.

Consider double isolation (double block and bleed) and the locking or labelling of closed valves.

Do not assume that the system has depressurised even when the pressure gauge indicates zero.

1.9 Temperature

Allow time for temperature to normalise after isolation to avoid the danger of burns and consider whether protective clothing (including safety glasses) is required.

It is recommended that the valve is insulated in order to reduce the risk of burns when used on steam or other high temperature media.

PTFE SEALS

If seals made from PTFE have been subjected to a temperature approaching 260 °C (500 °F) or higher, they will give off toxic fumes, which if inhaled are likely to cause temporary discomfort. It is essential for a no smoking rule to be enforced in all areas where PTFE is stored, handled or processed as persons inhaling the fumes from burning tobacco contaminated with PTFE particles can develop 'polymer fume fever'.

1.10 Tools and consumables

Before starting work ensure that you have suitable tools and/or consumables available. Use only genuine Spirax Sarco replacement parts.

1.11 Protective clothing

Consider whether you and/or others in the vicinity require any protective clothing to protect against the hazards of, for example, chemicals, high/low temperature, radiation, noise, falling objects, and dangers to eyes and face.

1.12 Permits to work

All work must be carried out or be supervised by a suitably competent person.
Installation and operating personnel should be trained in the correct use of the product according to the Installation and Maintenance Instructions.
Where a formal 'permit to work' system is in force it must be complied with. Where there is no such system, it is recommended that a responsible person should know what work is going on and, where necessary, arrange to have an assistant whose primary responsibility is safety. Post 'warning notices' if necessary.

1.13 Handling

Manual handling of large and/or heavy products may present a risk of injury. Lifting, pushing, pulling, carrying or supporting a load by bodily force can cause injury particularly to the back. You are advised to assess the risks taking into account the task, the individual, the load and the working environment and use the appropriate handling method depending on the circumstances of the work being done.

1.14 Safe lifting practice

It is recommended to lift the complete valve assembly using the correct equipment(s) and techniques so as not to cause damage or injury. Valves should be supported under the inlet and outlet connections, not the actuator or accessories, an careful attention should be made to prevent the valve from rotating during the lift sequence. When installed, the neither the valve or its accessories should be used as a hand hold or step for access to other part of the plant.



1.15 Residual hazards

In normal use the external surface of the product may be very hot. If used at the maximum permitted operating conditions the surface temperature of some products may reach temperatures of 538 °C (1 000 °F).
Many products are not self-draining. Take due care when dismantling or removing the product from an installation (refer to 'Maintenance instructions').

1.16 Freezing

Provision must be made to protect products which are not self-draining against frost damage in environments where they may be exposed to temperatures below freezing point.

1.17 Disposal

Unless otherwise stated in the Installation and Maintenance Instructions, this product is recyclable and no ecological hazard is anticipated with its disposal providing due care is taken. However, if the valve is fitted with a Viton or PTFE component, special care must be taken to avoid potential health hazards associated with decomposition/burning of these seats.

PTFE:

- **Can only be disposed of by approved methods, not incineration.**
- **Keep PTFE waste in a separate container, do not mix it with other rubbish, and consign it to a landfill site.**

Regulation (EC) No 1907/2006 - Registration, Evaluation, Authorisation and Restriction of Chemicals (REACH) Should any substances of very high concern be found within a product, details of the location will be identified within installation and maintenance instructions Section 2.4 : Materials. Further information about product compliance is available at www.spiraxsarco.com/product-compliance

1.18 Sizing

Control valves should be correctly sized and selected for the application. Incorrect sizing can result in environmental noise limits being exceeded. Poor sizing can also lead to poor control of the process or premature failure of the valve. Please consult Spirax Sarco for guidance.

1.19 Returning products

Customers and stockists are reminded that under EC Health, Safety and Environment Law, when returning products to Spirax Sarco they must provide information on any hazards and the precautions to be taken due to contamination residues or mechanical damage which may present a health, safety or environmental risk. This information must be provided in writing including Health and Safety data sheets relating to any substances identified as hazardous or potentially hazardous.

1.20 Working safely with cast iron products on steam

Cast iron products are commonly found on steam and condensate systems. If installed correctly using good steam engineering practices, it is perfectly safe. However, because of its mechanical properties, it is less forgiving compared to other materials such as SG iron or carbon steel. The following are the good engineering practices required to prevent waterhammer and ensure safe working conditions on a steam system.

Safe Handling

Cast Iron is a brittle material. If the product is dropped during installation and there is any risk of damage the product should not be used unless it is fully inspected and pressure tested by the manufacturer.

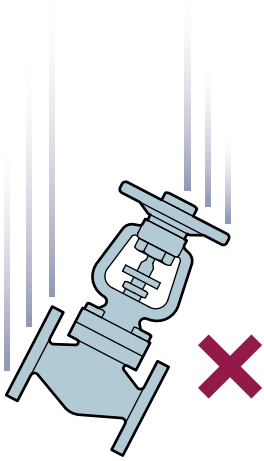

1.21 Responsibilities of the operator and operating (including maintenance) personnel.

The operator is responsible for ensuring that safe systems of operation and practice are implemented and maintained. Only competent persons must be allowed to be able to operate and maintain these devices, and these persons must be familiar with, and comply with the applicable health and safety standards or guidelines.

The installation and maintenance instructions should form part of the standard operating procedures for maintenance and must therefore be kept in an accessible location and in a legible condition. Product identification and safety related labels must also be kept in a clean and legible condition. Identification and safety labels must be replaced if they become damaged or obscured in operation.

1.22 Installation and maintenance of valves in hazardous environments.

The Spira-trol™ valve is classified as out of scope for ATEX and therefore suitable for use in hazardous environments. However, the valve must be correctly insulated in accordance to any local auto-ignition temperature. Regular cleaning must be considered for areas where dust may settle. Maintenance programs must consider the correct use of non-sparking tools, and the installation must consider the potential for ignition source as a result of dissimilar metals in the pipeline.

Prevention of waterhammer

Steam trapping on steam mains:

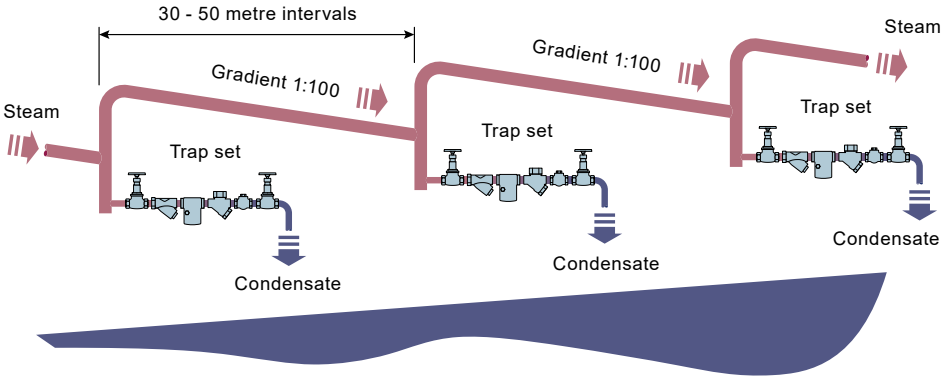

Steam Mains - Do's and Don'ts:

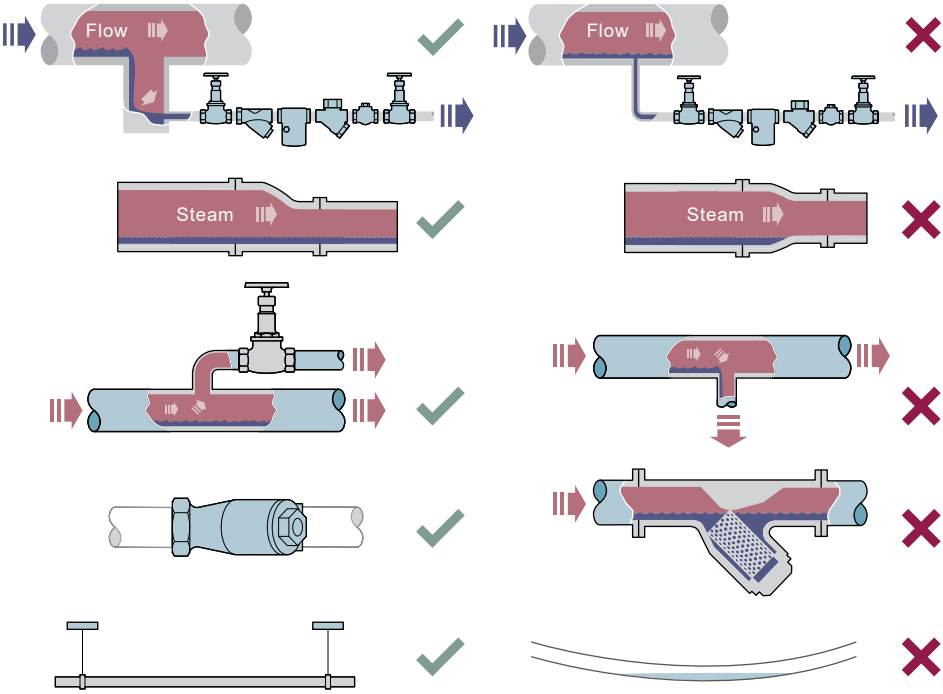

Prevention of tensile stressing

Pipe misalignment:

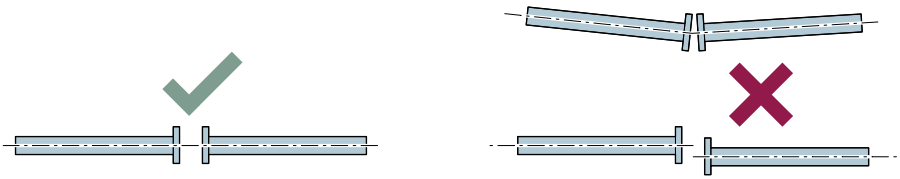

Installing products or re-assembling after maintenance:

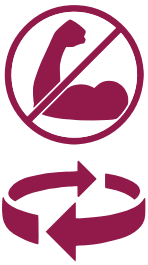

Do not over tighten.
Use correct torque figures.

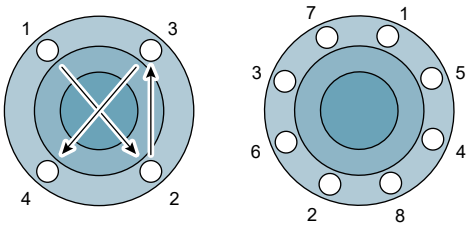

Flange bolts should be gradually tightened across diameters to ensure even load and alignment.

Prevention of tensile stressing continued on next page

Thermal expansion:

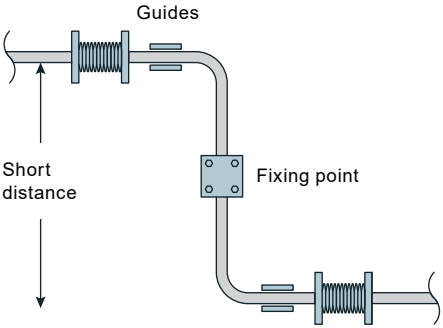

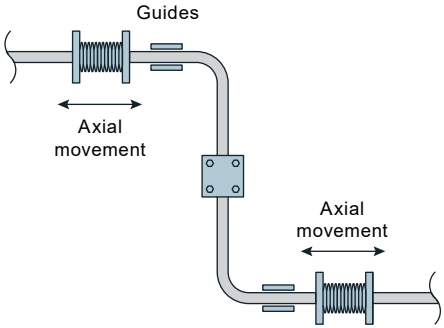

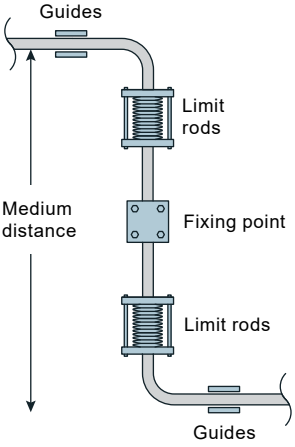

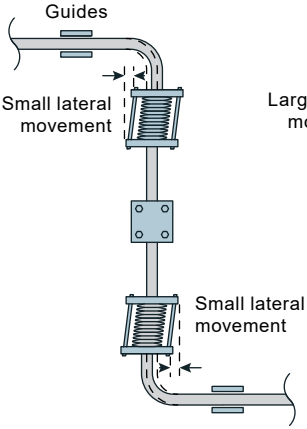

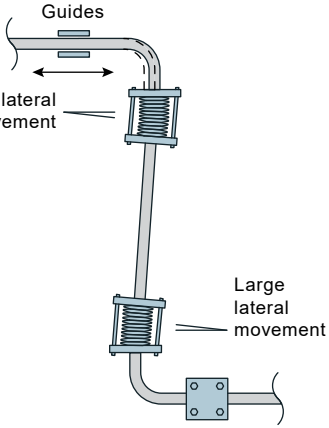

2. General product information

2.1 General description

Spira-trol™ is a range of two-port single seat globe valves with cage-retained seats conforming to either EN (DIN) or ASME standards. These valves are available as follows:

- DN15 to DN200 (½" to 8") with a choice of three body materials.
- DN250 and DN300 (10" and 12") with a choice of two body materials.

These valves, when used in conjunction with a pneumatic or electric linear actuator provide modulating control or on/off service.

Spira-trol™ valve characteristic - options:

KE and **KEA**	**Equal percentage (E) -** Suitable for most modulating process control
LE and **LEA**	applications providing good control at low flowrates.
KF and **KFA**	**Fast opening (F) -** For on/off applications only.
KL and **KLA**	**Linear (L) -** Primarily for liquid flow control where the differential
LL and **LLA**	pressures across the valve is constant.

Throughout this document, reference has been made to the standard KE, KEA, LE and LEA control valves. With the exception of the trim type, all derivatives are identical.

Spira-trol™ two-port control valves are compatible with the following actuators and positioners:

Electric	DN15 - DN50: AEL3
	DN15 - DN100: AEL7, AEL8
	DN125 - DN300 : AEL7
Pneumatic	PN1000, PN9000 and TN2000

Refer to the relevant Technical Information sheet for further details.

2.2 Technical data

Plug design			Parabolic
Leakage	Metal-to-metal	Standard seat Class IV with the option of Class V	
	Soft seal	Balanced	Class IV
		Unbalanced	Class VI
Rangeability		Equal	50:1
		Linear	30:1
		Fast opening	10:1
Travel		DN15 to DN50 (½" to 2")	20 mm (¾")
		DN65 to DN100 (2½" to 4")	30 mm (1 3/16")
		DN125 to DN300 (5" to 12")	70 mm (2¾")
Pressure/temperature limits		**KE4**_ see Section 2.3	
		KE6_ see Section 2.4	
		KE7_ see Section 2.5	
		KEA4_ see Section 2.6	
		KEA6_ see Section 2.7	
		KEA7_ see Section 2.8	
		LE3_ see Section 2.9	
		LE4_ see Section 2.10	
		LE6_ see Section 2.11	
		LEA3_ see Section 2.12	
		LEA4_ see Section 2.13	
		LEA6_ see Section 2.14	

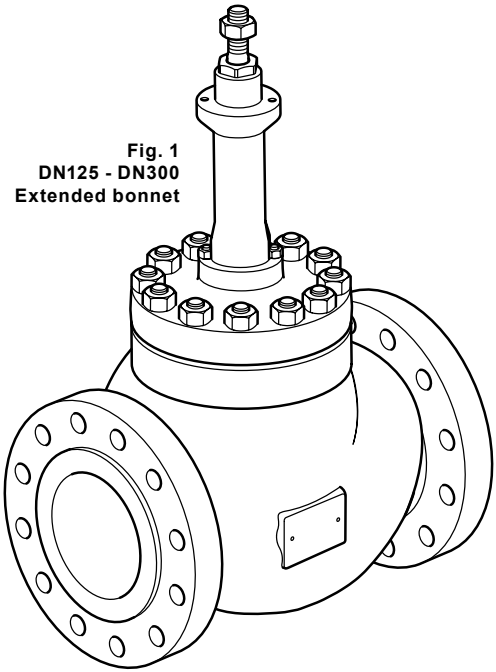

Fig. 1
DN125 - DN300
Extended bonnet

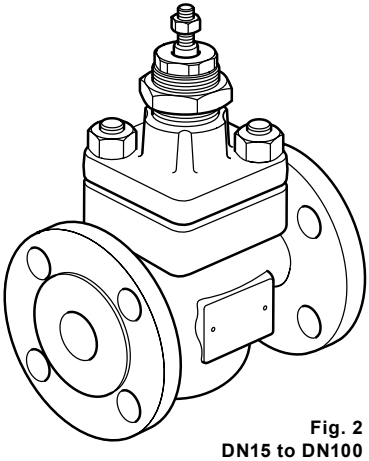

Fig. 2
DN15 to DN100
KE, KEA and LEA valves

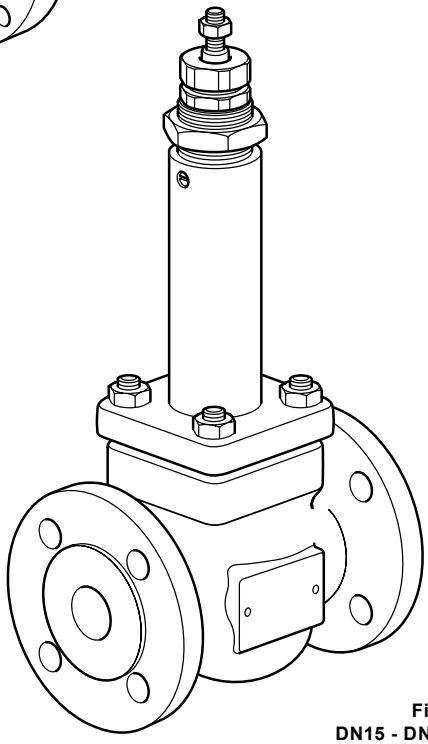

Fig. 3
DN15 - DN100
KE, KEA, LE and LEA with bellows seal (D)

2.3 Pressure/temperature limits

KE43 (Carbon steel)

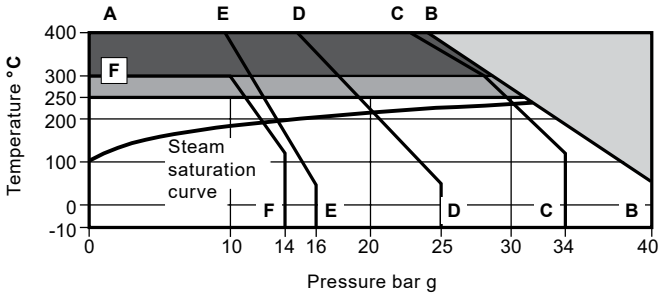

The product **must not** be used in this region.

High temperature packing is required for use in this region.

High temperature bolting and packing is required for use in this region.

A - B Flanged EN 1092 PN40.

A - C Flanged JIS/KS 20.

A - D Flanged EN 1092 PN25.

A - E Flanged EN 1092 PN16.

F - F Flanged JIS/KS 10.

Bellows only - Maximum operating temperature

Minimum operating temperature	-10 °C
Note: For lower operating temperatures consult Spirax Sarco.	
Maximum differental pressures	See relevant actuator Technical Information sheet
Maximum cold hydraulic test pressure of:	60 bar g
Warning: If the valve is fitted with a bellows it must be removed if hydraulic testing is to be done.	

Where the process fluid temperature is sub-zero and the ambient temperature is below +5°C, the external moving parts of the valve and actuator must be heat traced to maintain normal operation.

When selecting a valve with a bellows sealed bonnet, the pressure / temperature limit of the bellows must be read in conjunction with the valve pressure / temperature limits shown in the table opposite.

Body design conditions			PN40
Maximum design pressure			40 bar g @ 50 °C
Maximum design temperature			400 °C
Minimum design temperature			-10 °C
Maximum operating temperature	PEEK soft seat	- Option C or P	220 °C
	Standard packing PTFE chevron	- Option P or N	250 °C[1]
	Graphite packing	- Option H[2]	400 °C
	Extended bonnet with graphite packing	- Option E (with graphite packing)	
	Bellows D	- Option D	400 °C
Minimum operating temperature[4]	PTFE chevron packing		-10 °C
	Graphite packing		-10 °C
Maximum differential pressures		See relevant actuator Technical Information Sheet	
Maximum cold hydraulic test pressure of:			60 bar g

Notes:
[1] Maximum Continuous Operation for PTFE: 220 °C
[2] For valves operating above 300 °C, extended bonnet is recommended
[3] For valves operating above 300 °C, high temperature bolting is recommended
[4] For lower operating temperatures consult Spirax Sarco

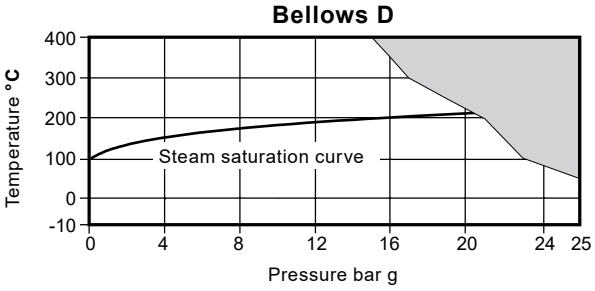

The product **must not** be used in this region.

2.4 Pressure/temperature limits

KE61 and KE63 (Stainless steel)

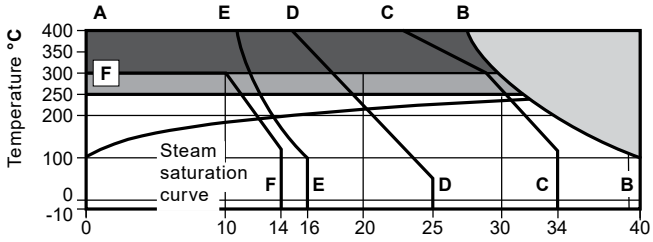

The product **must not** be used in this region.

High temperature packing is required for use in this region.

High temperature bolting and packing is required for use in this region.

A - B Flanged EN 1092 PN40 and screwed BSP.

A - C Flanged JIS/KS 20.

A - D Flanged EN 1092 PN25.

A - E Flanged EN 1092 PN16.

F - F Flanged JIS/KS 10.

Bellows only - Maximum operating temperature

Minimum operating temperature	PTFE packing	-10 °C
	Graphite packing	-10 °C
Note: For lower operating temperatures consult Spirax Sarco.		
Maximum differental pressures		See relevant actuator Technical Information sheet
Maximum cold hydraulic test pressure of:		60 bar g
Warning: If the valve is fitted with a bellows it must be removed if hydraulic testing is to be done.		

Where the process fluid temperature is sub-zero and the ambient temperature is below +5°C, the external moving parts of the valve and actuator must be heat traced to maintain normal operation.

When selecting a valve with a bellows sealed bonnet, the pressure / temperature limit of the bellows must be read in conjunction with the valve pressure / temperature limits shown in the table opposite.

Body design conditions				PN40
Maximum design pressure				40 bar g @ 100 °C
Maximum design temperature				400 °C
Minimum design temperature				-10 °C
Maximum operating temperature	Standard packing PTFE chevron	-	Option P or N	250 °C[1]
	PEEK seat	-	Option C or P	220 °C
	Graphite packing	-	Option H[2]	400 °C
	Extended bonnet with graphite packing	-	Option E (with graphite packing)	400 °C
	Bellows D	-	Option D	400 °C
Minimum operating temperature[3]	PTFE chevron packing			-10 °C
	Graphite packing			-10 °C
Maximum differential pressures			See relevant actuator Technical Information Sheet	
Maximum cold hydraulic test pressure of:				60 bar g

Notes:
[1] Maximum Continuous Operation for PTFE: 220 °C
[2] For valves operating above 300 °C, extended bonnet is recommended
[3] For lower operating temperatures consult Spirax Sarco

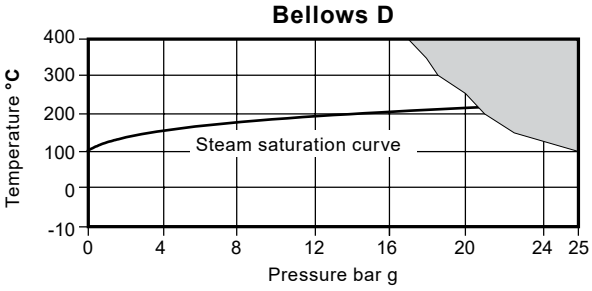

The product **must not** be used in this region.

2.5 Pressure/temperature limits

KE71 and KE73 (SG iron)

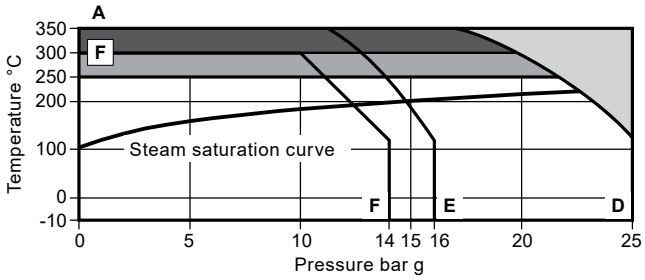

The product **must not** be used in this region.

High temperature packing is required for use in this region.

High temperature bolting and packing is required for use in this region.

A - D Flanged EN 1092 PN25 and Screwed BSP.

A - E Flanged EN 1092 PN16.

F - F Flanged JIS/KS 10.

Bellows only - Maximum operating temperature

Minimum operating temperature	-10 °C
Note: For lower operating temperatures consult Spirax Sarco.	
Maximum differental pressures	See relevant actuator Technical Information sheet
Maximum cold hydraulic test pressure of:	38 bar g
Warning: If the valve is fitted with a bellows it must be removed if hydraulic testing is to be done.	

Where the process fluid temperature is sub-zero and the ambient temperature is below +5°C, the external moving parts of the valve and actuator must be heat traced to maintain normal operation.

When selecting a valve with a bellows sealed bonnet, the pressure / temperature limit of the bellows must be read in conjunction with the valve pressure / temperature limits shown in the table opposite.

Body design conditions				PN25
Maximum design pressure				25 bar g @ 120 °C
Maximum design temperature				350 °C @
Minimum design temperature				-10 °C
Maximum operating temperature	Standard packing PTFE chevron	-	Option P or N	250 °C[1]
	PEEK seat	-	Option C or P	220 °C
	Graphite packing	-	Option H[2]	350 °C[3]
	Extended bonnet with graphite packing	-	Option E (with graphite packing)	
	Bellows D	-	Option D	350 °C
Minimum operating temperature[4]	PTFE chevron packing			-10 °C
	Graphite packing			-10 °C
Maximum differential pressures				See relevant actuator Technical Information Sheet
Maximum cold hydraulic test pressure of:				37.5 bar g

Note:
[1] Maximum Continuous Operation for PTFE: 220 °C
[2] For valves operating above 300 °C, extended bonnet is recommended
[3] For valves operating above 300 °C, high temperature bolting is recommended
[4] For lower operating temperatures consult Spirax Sarco

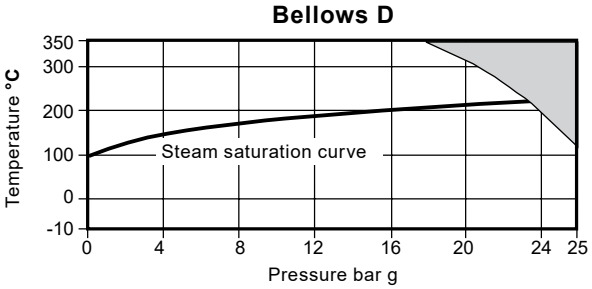

The product **must not** be used in this region.

2.6 Pressure/temperature limits

KEA41, KEA42 and KEA43 (Carbon steel)

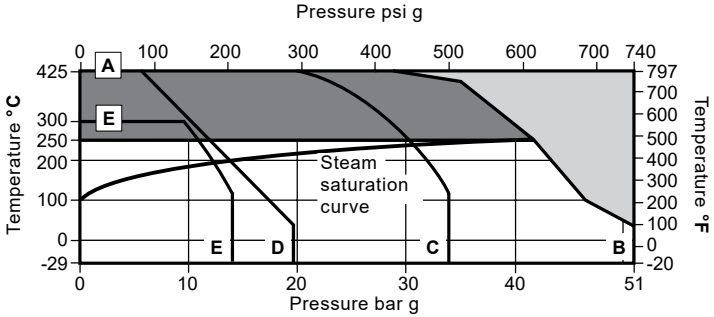

The product **must not** be used in this region.

Graphite stem sealing is required for use in this region.

A - B Flanged ASME 300 and Screwed NPT and SW.

A - C Flanged JIS/KS 20.

A - D Flanged ASME 150.

E - E Flanged JIS/KS 10.

Bellows only - Maximum operating temperature

Minimum operating temperature	-29 °C	(-20 °F)
Note: For lower operating temperatures consult Spirax Sarco.		
Maximum differental pressures	See relevant actuator Technical Information sheet	
Maximum cold hydraulic test pressure of:	77 bar g	(1 100 psi g)
Warning: If the valve is fitted with a bellows it must be removed if hydraulic testing is to be done.		

Where the process fluid temperature is sub-zero and the ambient temperature is below +5°C (+41°F), the external moving parts of the valve and actuator must be heat traced to maintain normal operation.

When selecting a valve with a bellows sealed bonnet, the pressure / temperature limit of the bellows must be read in conjunction with the valve pressure / temperature limits shown in the table opposite.

Body design conditions				ASME 150 and ASME 300
Maximum design pressure	ASME 150			19.6 bar g @ 38 °C (284 psi g @ 100 °F)
	ASME 300			51.1 bar g @ 38 °C (740 psi g @ 100 °F)
Maximum design temperature	ASME 150			425 °C @ 5.5 bar g (800 °F @ 80 psi g)
	ASME 300			425 °C @ 28.8 bar g (800 °F @ 410 psi g)
Minimum design temperature				-29 °C (-20 °F)
Maximum operating temperature	Standard packing PTFE chevron	-	Option P or N	250 °C (482 °F)[1]
	PEEK seat	-	Option C and P	220 °C (428 °F)[1]
	Graphite packing	-	Option H[2]	425 °C (800 °F)
	Extended bonnet with graphite packing	-	Option E	
	Bellows D	-	Option D	425 °C (800 °F)
Minimum operating temperature[3]	PTFE chevron packing			-29 °C (-20 °F)
	Graphite packing			-29 °C (-20 °F)
Maximum differential pressures				See relevant actuator Technical Information Sheet
Maximum cold hydraulic test pressure of:				77 bar g (1100 psi g)

Notes:
[1] Maximum Continuous Operation for PTFE: 220 °C (428 °F)
[2] For valves operating above 300 °C (572 °F), extended bonnet is recommended
[3] For lower operating temperatures consult Spirax Sarco

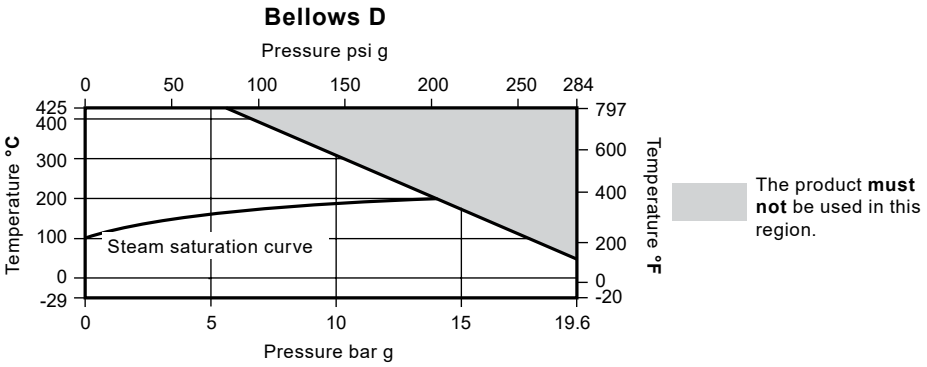

2.7 Pressure/temperature limits

KEA61, KEA62 and KEA63 (Stainless steel)

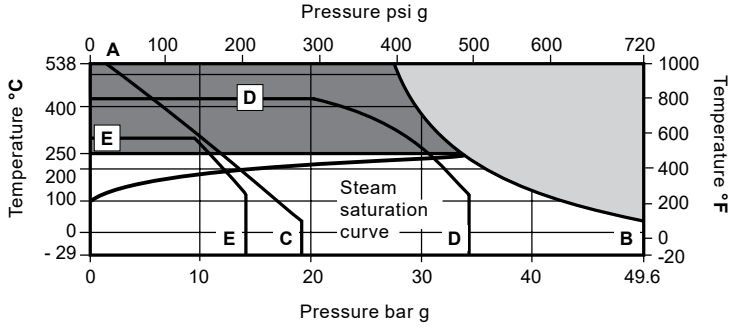

The product **must not** be used in this region.

Graphite stem sealing is required for use in this region.

A - B Flanged ASME 300 and Screwed NPT and SW.

A - C Flanged ASME 150.

A - D Flanged JIS/KS 20.

E - E Flanged JIS/KS 10.

Bellows only - Maximum operating temperature

Minimum operating temperature	PTFE packing	-29 °C	(-20 °F)
	Graphite packing	-29 °C	(-20 °F)
Note: For lower operating temperatures consult Spirax Sarco.			
Maximum differental pressures		See relevant actuator Technical Information sheet	
Maximum cold hydraulic test pressure of:		75 bar g	(1 087.5 psi g)
Warning: If the valve is fitted with a bellows it must be removed if hydraulic testing is to be done.			

Where the process fluid temperature is sub-zero and the ambient temperature is below +5°C (+41°F), the external moving parts of the valve and actuator must be heat traced to maintain normal operation.

When selecting a valve with a bellows sealed bonnet, the pressure / temperature limit of the bellows must be read in conjunction with the valve pressure / temperature limits shown in the table opposite.

Body design conditions				ASME 150 and ASME 300
Maximum design pressure	ASME 150 (6" and 8" only)			19 bar g @ 38 °C (275 psi g @ 100 °F)
	ASME 300			49.6 bar g @ 38 °C (720 psi g @ 100 °F)
Maximum design temperature	ASME 150			538 °C @ 1.4 bar g (1000 °F @ 20 psi g)
	ASME 300			538 °C @ 25.2 bar g (1000 °F @ 365 psi g)
Minimum design temperature				-29 °C (-20 °F)
Maximum operating temperature	Standard packing PTFE chevron	-	Option P or N	250 °C (482 °F)[1]
	PEEK seat	-	Option C and P	220 °C (428 °F)[1]
	Graphite packing	-	Option H[2]	538 °C (1000 °F)
	Extended bonnet with graphite packing	-	Option E (with graphite packing)	
	Bellows D	-	Option D	425 °C (800 °F)
Minimum operating temperature [3]	PTFE chevron packing			-29 °C (-20 °F)
	Graphite packing			-29 °C (-20 °F)
Maximum differential pressures				See relevant actuator Technical Information Sheet
Maximum cold hydraulic test pressure of:				75 bar g (1087.5 psi g)

Note:
[1] Maximum Continuous Operation for PTFE: 220 °C (428 °F)
[2] For valves operating above 300 °C (572 °F), extended bonnet is recommended
[3] For lower operating temperatures consult Spirax Sarco

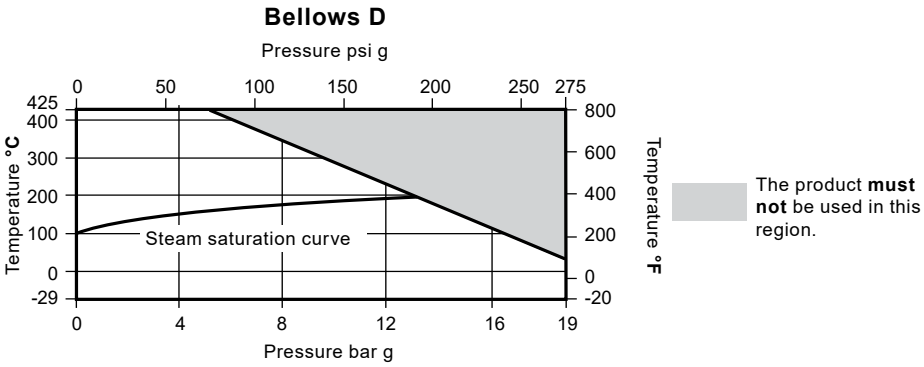

2.8 Pressure/temperature limits

KEA71 and KEA73 (SG iron)

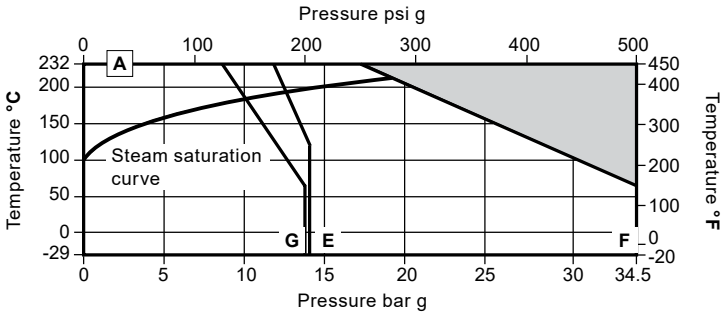

The product **must not** be used in this region.

A - E Flanged JIS/KS 10.

A - F Flanged ASME 250 and Screwed NPT and SW.

A - G Flanged ASME 125.

Bellows only - Maximum operating temperature

Minimum operating temperature		-29 °C	(-20 °F)
Note: For lower operating temperatures consult Spirax Sarco.			
Maximum differential pressures		See relevant actuator Technical Information sheet	
Maximum cold hydraulic test pressure of:	ASME 125	20.7 bar g	(300 psi g)
	ASME 250	51.8 bar g	(750 psi g)

Warning: If the valve is fitted with a bellows it must be removed if hydraulic testing is to be done.

Where the process fluid temperature is sub-zero and the ambient temperature is below +5°C (+41°F), the external moving parts of the valve and actuator must be heat traced to maintain normal operation.

When selecting a valve with a bellows sealed bonnet, the pressure / temperature limit of the bellows must be read in conjunction with the valve pressure / temperature limits shown in the table opposite.

Body design conditions				ASME 125 and ASME 250
Maximum design pressure	ASME 125			13.8 bar g @ 65 °C (200 psi g @ 150 °F)
	ASME 250			34.5 bar g @ 65 °C (500 psi g @ 150 °F)
Maximum design temperature	ASME 125			232 °C @ 8.6 bar g (450 °F @ 125 psi g)
	ASME 250			232 °C @ 17.2 bar g (450 °F @ 250 psi g)
Minimum design temperature				-29 °C (-20 °F)
Maximum operating temperature	PEEK soft seat	-	Option C or P	220 °C (428 °F)
	Standard packing PTFE chevron	-	Option P or N	232 °C (450 °F)[1]
	Graphite packing	-	Option H	
	Bellows D	-	Option D	
Minimum operating temperature [2]	PTFE chevron packing			-29 °C (-20 °F)
	Graphite packing			
Maximum differential pressures				See relevant actuator Technical Information Sheet
Maximum cold hydraulic test pressure of:				51.8 bar g (750 psi g)

Notes:
[1] Maximum Continuous Operation for PTFE: 220 °C (428 °F)
[2] For lower operating temperatures consult Spirax Sarco

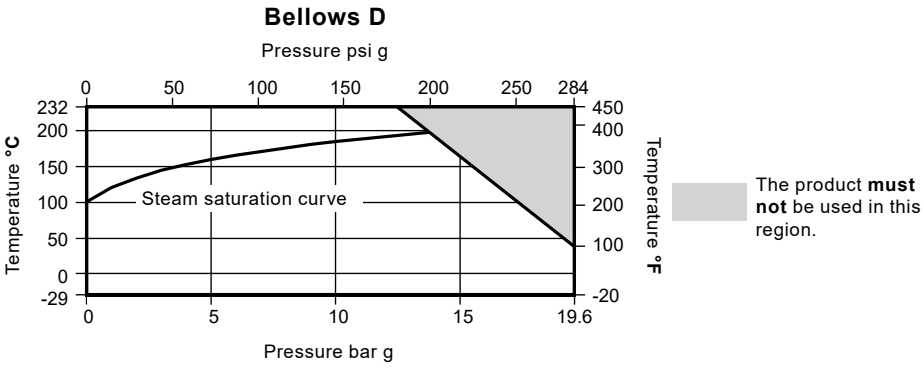

2.9 Pressure/temperature limits

LE31 and LE33 (Cast iron valve body)

Body design conditions			PN16
Maximum design pressure			16 bar g @ 120 °C
Maximum design temperature			300 °C @ 9.6 bar g
Minimum design temperature			-10 °C
Maximum operating temperature	Standard packing PTFE chevron	- Option **P** or **N**	250 °C[1]
	PEEK soft seat	- Option **C** or **P**	220 °C
	Graphite packing	- Option **H**[2]	300 °C
	Bellows	- Option **D**	300 °C
Minimum operating temperature[4]			-10 °C
Maximum differential pressures		See relevant actuator Technical Information sheet.	
Maximum cold hydraulic test pressure of:			24 bar g

Notes:
[1] Maximum Continuous Operation for PTFE: 220 °C
[2] For lower operating temperatures consult Spirax Sarco

Screwed BSP
Flanged EN 1092 PN16

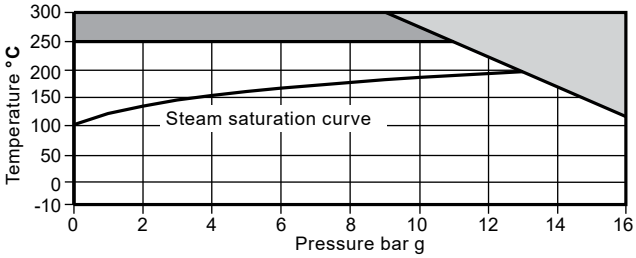

Where the process fluid temperature is sub-zero and the ambient temperature is below +5°C (+41°F), the external moving parts of the valve and actuator must be heat traced to maintain normal operation.

When selecting a valve with a bellows sealed bonnet, the pressure / temperature limit of the bellows must be read in conjunction with the valve pressure / temperature limits shown in the table opposite.

The product **must not** be used in this region.

High temperature graphite packing is required for use in this region.

2.10 Pressure/temperature limits

LE43 (Carbon steel valve body)

Body design conditions			PN16
Maximum design pressure			16 bar g @ 50 °C
Maximum design temperature			400 °C @ 9.5 bar g
Minimum design temperature			-10 °C
Maximum operating temperature	Standard packing PTFE chevron	- Option **P** or **N**	250 °C[1]
	PEEK soft seat	- Option **C** or **P**	220 °C
	Graphite packing	- Option **H**	400 °C
	Bellows	- Option **D**	400 °C
Minimum operating temperature			-10 °C
Maximum differential pressures			See relevant actuator Technical Information sheet.
Maximum cold hydraulic test pressure of:			24 bar g

Notes:
[1] Maximum Continuous Operation for PTFE: 220 °C
[2] For valves operating above 300 °C, high temperature bolting is recommended
[3] For lower operating temperatures consult Spirax Sarco

Flanged EN 1092 PN16

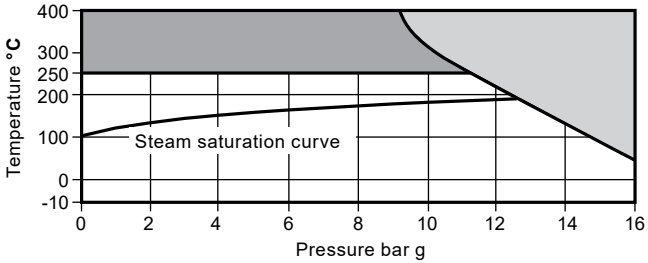

Where the process fluid temperature is sub-zero and the ambient temperature is below +5°C (+41°F), the external moving parts of the valve and actuator must be heat traced to maintain normal operation.

When selecting a valve with a bellows sealed bonnet, the pressure / temperature limit of the bellows must be read in conjunction with the valve pressure / temperature limits shown in the table opposite.

Flanged JIS/KS 10

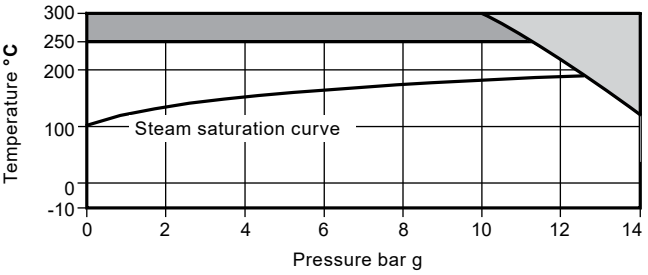

The product **must not** be used in this region.

High temperature graphite packing is required for use in this region.

2.11 Pressure/temperature limits

LE63 (Stainless steel valve body)

Body design conditions			PN16
Maximum design pressure			16 bar g @ 100 °C
Maximum design temperature			400 °C @ 10.9 bar g
Minimum design temperature			-10 °C
Maximum operating temperature	Standard packing PTFE chevron	- Option **P** or **N**	250 °C[1]
	PEEK soft seat	- Option **C** or **P**	220 °C
	Graphite packing	- Option **H**[2]	400 °C
	Bellows	- Option **D**	400 °C
Minimum operating temperature		PTFE packing	-10 °C
		Graphite packing	-10 °C
Maximum differential pressures		See relevant actuator Technical Information sheet.	
Maximum cold hydraulic test pressure of:			24 bar g

Notes:
[1] Maximum Continuous Operation for PTFE: 220 °C
[2] For lower operating temperatures consult Spirax Sarco

Flanged EN 1092 PN16

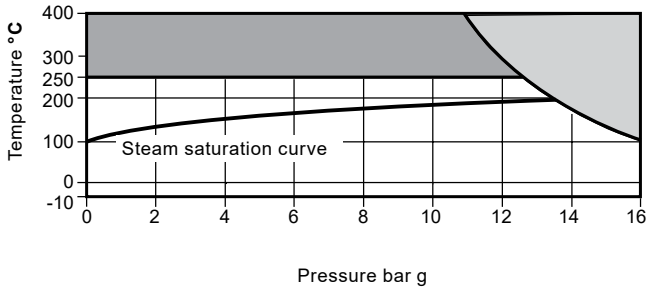

Where the process fluid temperature is sub-zero and the ambient temperature is below +5°C (+41°F), the external moving parts of the valve and actuator must be heat traced to maintain normal operation.

When selecting a valve with a bellows sealed bonnet, the pressure / temperature limit of the bellows must be read in conjunction with the valve pressure / temperature limits shown in the table opposite.

Flanged JIS/KS 10

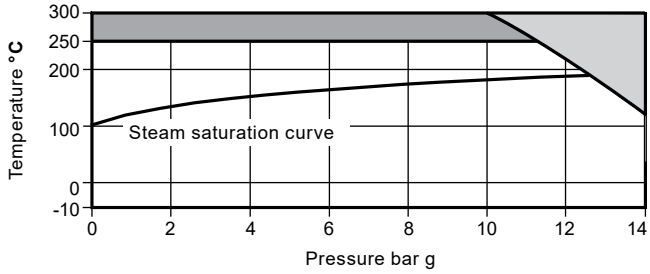

The product **must not** be used in this region.

High temperature graphite packing is required for use in this region.

2.12 Pressure/temperature limits

LEA31 and LEA33 (Cast Iron valve body)

Body design conditions				ASME 125
Maximum design pressure			13.7 bar g @ 65 °C	(200 psi g @ 150 °F)
Maximum design temperature			232 °C @ 8.6 bar g	(450 °F @ 125 psi g)
Minimum design temperature			-29 °C	(-20 °F)
Maximum operating temperature	Standard packing PTFE chevron	- Option **P** or **N**	232 °C [1]	(306 °F)
	PEEK soft seat	- Option **C** or **P**	220 °C	(428 °F)
	Graphite packing	- Option **H**	232 °C	(450 °F)
	Bellows	- Option **D**	232 °C	(450 °F)
Minimum operating temperature [2]			-29 °C	(-20 °F)
Maximum differential pressures			See relevant actuator Technical Information sheet.	
Maximum cold hydraulic test pressure of:			21 bar g	(300 psi g)

Notes:
[1] Maximum Continuous Operation for PTFE: 220 °C (428 °F)
[2] For lower operating temperatures consult Spirax Sarco

Screwed NPT
Flanged ASME class 125

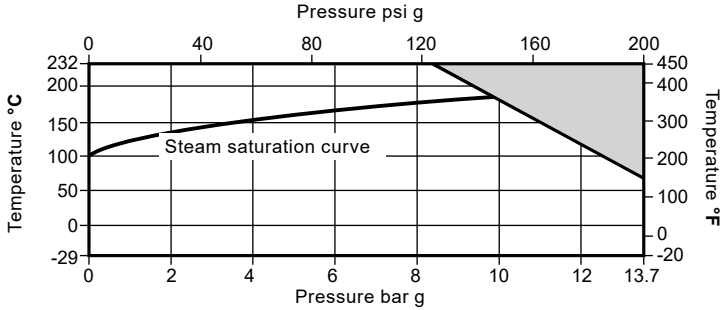

The product **must not** be used in this region.

Where the process fluid temperature is sub-zero and the ambient temperature is below +5°C (+41°F), the external moving parts of the valve and actuator must be heat traced to maintain normal operation.

When selecting a valve with a bellows sealed bonnet, the pressure / temperature limit of the bellows must be read in conjunction with the valve pressure / temperature limits shown in the table opposite.

2.13 Pressure/temperature limits

LEA43 (Carbon steel valve body)

Body design conditions				ASME 150
Maximum design pressure			19.6 bar g @ 38 °C	(285 psi g @ 100 °F)
Maximum design temperature			425 °C @ 5.5 bar g	(800 °F @ 80 psi g)
Minimum design temperature			-29 °C	(-20 °F)
Maximum operating temperature	Standard packing PTFE chevron	- Option **P** or **N**	250 °C[1]	(482 °F)[1]
	PEEK soft seat	- Option **C** or **P**	220 °C	(482 °F)
	Graphite packing	- Option **H**[2]	425 °C	(800 °F)
	Extended bonnet with graphite packing	- Option **E**	425 °C	(800 °F)
	Bellows	- Option **D**	425 °C	(800 °F)
Minimum operating temperature [3]			-29 °C	(-20 °F)
Maximum differential pressures			See relevant actuator Technical Information sheet.	
Maximum cold hydraulic test pressure of:			29.5 bar g	(428 psi g)

Notes:
[1] Maximum Continuous Operation for PTFE: 220 °C
[2] For valves operating above 300 °C, extended bonnet is recommended
[3] For lower operating temperatures consult Spirax Sarco

Flanged ASME class 150

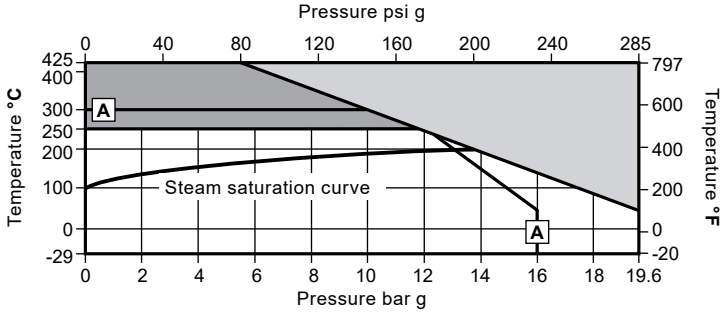

Where the process fluid temperature is sub-zero and the ambient temperature is below +5°C (+41°F), the external moving parts of the valve and actuator must be heat traced to maintain normal operation.

When selecting a valve with a bellows sealed bonnet, the pressure / temperature limit of the bellows must be read in conjunction with the valve pressure / temperature limits shown in the table opposite.

Flanged JIS/KS 10

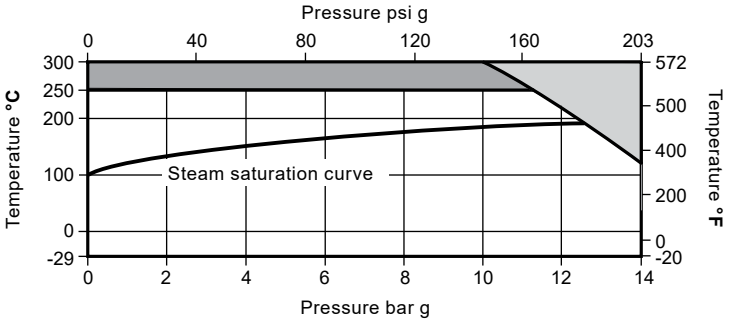

The product **must not** be used in this region.

High temperature graphite packing is required for use in this region.

2.14 Pressure/temperature limits

LEA63 (Stainless steel valve body)

Body design conditions				ASME 150
Maximum design pressure			19.6 bar g @ 38 °C	(285 psi g @ 100 °F)
Maximum design temperature			538 °C @ 1.3 bar g	(1 000 °F @ 20 psi g)
Minimum design temperature			-29 °C	(-20 °F)
Maximum operating temperature	Standard packing PTFE chevron	- Option **P** or **N**	250 °C[1]	(482 °F)[1]
	PEEK soft seat	- Option **C** or **P**	220 °C	(428 °F)
	Graphite packing	- Option **H**[2]	538 °C	(1 000 °F)
	Extended bonnet with Graphite packing	- Option **E**	538 °C	(1 000 °F)
	Bellows	- Option **D**	425 °C	(800 °F)
Minimum operating temperature [3]			-29 °C	(-20 °F)
Maximum differential pressures			See relevant actuator Technical Information sheet.	
Maximum cold hydraulic test pressure of:			28.4 bar g	(413 psi g)

Notes:
[1] Maximum Continuous Operation for PTFE: 220 °C
[2] For valves operating above 300 °C, extended bonnet is recommended
[3] For lower operating temperatures consult Spirax Sarco

Flanged ASME class 150

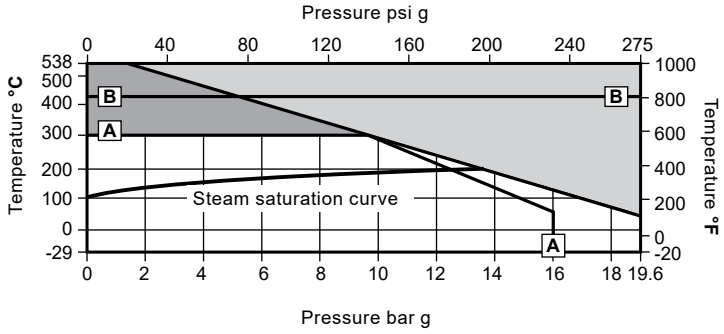

Where the process fluid temperature is sub-zero and the ambient temperature is below +5°C (+41°F), the external moving parts of the valve and actuator must be heat traced to maintain normal operation.

When selecting a valve with a bellows sealed bonnet, the pressure / temperature limit of the bellows must be read in conjunction with the valve pressure / temperature limits shown in the table opposite.

Flanged JIS/KS 10

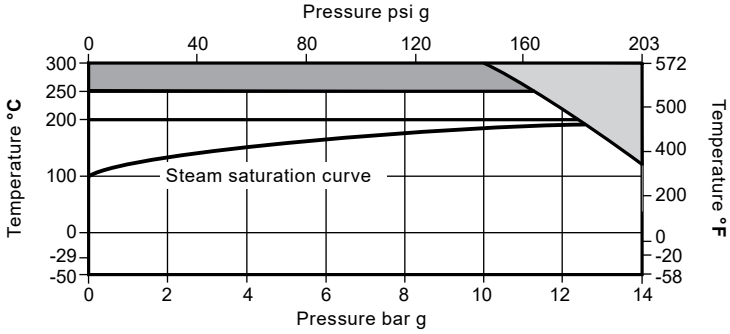

The product **must not** be used in this region.

High temperature graphite packing is required for use in this region.

3. Installation

3.1 Installation Safety Information



Caution
Before commencement of any work to inspect, install, commission, remove or modify the Spira-trol™ valve, please read to Section 1 “Safety Information”.



Installation Awareness

- Lifting and fitting of valves and actuators increases the risk of personal injury
- A working knowledge of linear control valves actuators is required
- Risk of injury by moving parts. Ensure that that the control system is disabled and isolated to ensure that the valve and actuator do not move without warning.

Crush hazard

- When actuators are to be fitted using lifting equipment always ensure that the valve (& actuator) is carefully slung in order that it cannot fall. Never attempt to remove a control valve from the line by using the actuator as the lifting point. The actuator or the lifting equipment could become damaged.
- Never stand under components that are being lifted. Head safety protection must always be worn when operating on or close to equipment where lifting operations are taking place.
- Do not place hands within the actuator yoke or on the stem of the valve or actuator when isolation of the control system has been removed.
- Do not attempt to restrict actuator stroke or movement, or increase seat load through the placing of objects within the actuator yoke.

Muscular skeletal damage

- For small valves and actuators that do not require mechanical lifting aids, always ensure that manual lifting best practice is observed. Always use two personnel where possible and ensure that proper access is available in order to ensure a secure foothold.

High noise

- Control valves can generate high noise under some conditions. Positioners and actuators can also vent air at elevated noise levels. Hearing protection should always be worn when working on or in the immediate vicinity of the valve.

Note: Before actioning any installation, observe the 'Safety information' in Section 1.
Referring to the Installation and Maintenance Instructions, name-plate and Technical Information Sheet, check that the product is suitable for the intended installation:

3.2 Check materials, pressure and temperature and their maximum values. **Do not exceed the performance rating of the valve.** If the maximum operating limit of the product is lower than that of the system in which it is being fitted, ensure that a safety device is included in the system to prevent overpressurisation.

3.3 Ensure selection and installation of all accessories plus the connections including bolting and gaskets are correctly specified and in accordance with the system design temperature and pressure limitations.

3.4 In case of pneumatically actuated valves ensure available air pressure available conforms to the requirements and limitation of the actuator and positioner. It is recommended to use a pneumatic filter regulator device to ensure correct conditioning of the pneumatic supply. Please refer to relevant actuator or positioner Technical Information sheet for details.

3.5 Remove protection covers from all connections and protective film from all name-plates, where appropriate, before installation on steam or other high temperature applications.

3.6 Determine the correct installation situation and the direction of fluid flow. The valve should preferably be installed along a horizontal pipeline with the valve mounted above the pipe (see Figure 3). When mounting an actuator to the valve body, the actuator Installation and Maintenance Instructions must be followed.

3.7 **Bypass arrangements** - It is recommended that isolating valves be fitted upstream and downstream of the control valve, together with a manual bypass control valve. This enables the process to be controlled manually using the bypass valve while the pneumatic valve is isolated for maintenance.

3.8 Support pipework should be used to prevent stresses being exerted on the valve body.
Note: If a DN125 to DN300 valve is to be installed in vertical pipework the actuator will require additional support.

3.9 Ensure adequate space is provided for the removal of the actuator from the valve body for maintenance purposes.

3.10 Isolate connecting pipework. Ensure it is clean from dirt, scale etc. Any debris entering the valve may damage the head seal preventing the specified shut off.

3.11 Open isolation valves slowly, until normal operating conditions are achieved.

3.12 Check for leaks and correct operation.

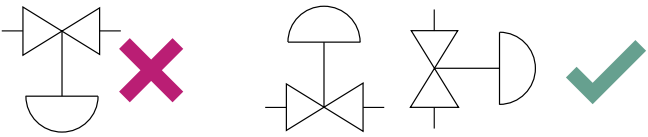

Fig. 4

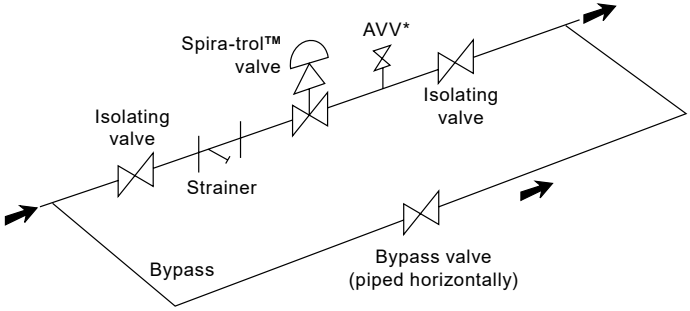

* Anti-vacuum valve recommended for steam installations.

Fig. 5

4. Maintenance

4.1 Maintenance Safety Information



Caution
Before commencement of any work to inspect or maintain the Spira-trol™ valve, please read to Section 1 “Safety Information”.



Installation Awareness

- Lifting and fitting of valves and actuators increases the risk of personal injury
- A working knowledge of linear control valves actuators is required
- Risk of injury by moving parts. Ensure that that the control system is disabled and isolated to ensure that the valve and actuator do not move without warning.

Crush hazard

- When actuators are to be fitted using lifting equipment always ensure that the valve (& actuator) is carefully slung in order that it cannot fall. Never attempt to remove a control valve from the line by using the actuator as the lifting point. The actuator or the lifting equipment could become damaged.
- Never stand under components that are being lifted. Head safety protection must always be worn when operating on or close to equipment where lifting operations are taking place.
- Do not place hands within the actuator yoke or on the stem of the valve or actuator when isolation of the control system has been removed.
- Do not attempt to restrict actuator stroke or movement, or increase seat load through the placing of objects within the actuator yoke.

Muscular skeletal damage

- For small valves and actuators that do not require mechanical lifting aids, always ensure that manual lifting best practice is observed. Always use two personnel where possible and ensure that proper access is available in order to ensure a secure foothold.

4.2 General

Valve parts are subject to normal wear and must be inspected and replaced as necessary. Inspection and maintenance frequency depends on the severity of the service conditions. This section provides instructions on replacement packing, stem, plug and seat and bellows. All maintenance operations can be performed with the valve body in the line.

Annually

The valve should be inspected for wear and tear replacing any worn or damaged parts such as valve plug and stem, valve seat and gland seals, refer to Section 6 'Spare parts'.

Stainless Steel Valves

316 stainless steel used in the construction of this product, particularly for screwed or close fitting parts, is very susceptible to galling or cold welding. This is an inherent characteristic of this type of material and great care should therefore be taken when dismantling or reassembling.
If the application permits, it is recommended that a light smear of PTFE based grease is applied to any mating part before reassembly.

High Temperature graphite packed seals are subject to wear during normal operation. We therefore recommend that graphite packing is replaced during this routine inspection to prevent premature failure of the packing during normal operation.

It is recommended that all soft seals and gaskets are replaced when the valve is disassembled.

Table 1 Recommended tightening torques - Control valve sizes DN15 to DN100

Spira-trol™ valve size	Torque (N m)	
	All versions (except Steam-Tight C)	Steam-Tight C
DN15 - DN25	50	30
DN32 - DN50	70	50
DN65 - DN80	130	130
DN100	100	100

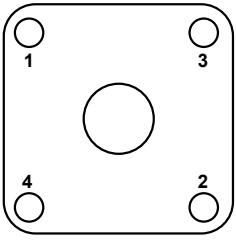

Fig. 6
4-hole bonnet tightening sequence

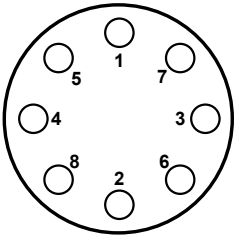

Fig. 7
8-hole bonnet tightening sequence

Table 2 Recommended tightening torques - Control valve sizes DN125 to DN300

	DN125	DN150	DN200 to DN300
KE	203 N m	211 N m	265 N m
KEA	-	245 N m	365 N m

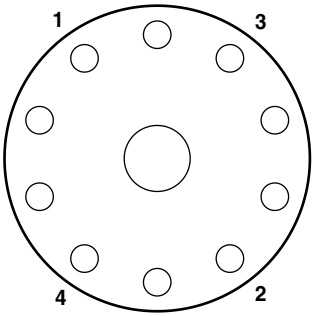

Fig. 8 DN125 to DN300

4.3 Removal of valve bonnet

This procedure is necessary before carrying out any of the maintenance procedures detailed in this document.

Before commencement of any work to inspect or maintain the Spira-trol™ valve, please read to Section 1 “Safety Information”.

Ensure the valve is depressurised and clear of media.

Ensure that the valve is correctly isolated from pressure both upstream and downstream.

Ensure that the control system is correctly isolated.

4.3.1 Remove the actuator from the valve. Refer to the Installation and Maintenance Instructions covering Spirax Sarco actuators.

4.3.2 Undo and remove the bonnet nuts (**27**) or the bolt if it is the LE valve.

4.3.3 Remove the bonnet assembly.

4.3.4 Remove and carefully dispose of the body gasket.

4.4 Replacement of PTFE gland packings (reference Figure 9)

4.4.1 Remove the lock-nut (**3**) and unscrew the gland nut (**18**).

4.4.2 Remove the plug and stem (**8**).

4.4.3 Remove the gland nut (**18**).

4.4.4 Remove and carefully dispose of the scrapper ring (**19**) from gland nut (**18**).

4.4.5 Clean the groove and inside diameter of the gland nut (**18**).

4.4.6 Withdraw the gland components and carefully dispose of the (**9**, **10**, **11**, **12**, **13**, **15**, **16** and **17**).

4.4.7 Clean the gland cavity.

4.4.8 Fit new gland components as shown here shown.

4.4.9 Remove and carefully dispose of the plastic installation tool.

4.4.10 Install scrapper ring (**19**) in the gland nut (**18**).

4.4.11 Apply a slight smear of anti-seize lubricant to the gland nut threads before screweing it in two or three turns. At this stage the packing must not be significantly compressed.

4.4.12 Final adjustment of the gland must be carried out after refitting the bonnet as detailed in Section 4.7.

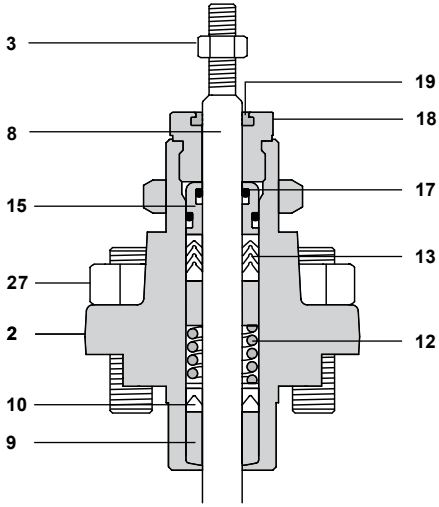

Fig. 9

4.5 Replacement of graphite gland packing (reference Figure 10)

4.5.1 Remove the lock-nut (**3**) and unscrew the gland nut (**18**)

4.5.2 Remove the plug and stem (**8**)

4.5.3 Remove the gland nut (**18**)

4.5.4 **Standard Bonnet (Fig. 10)**
Remove the upper Stellite bearing (**9**) and retain, withdraw the graphite packing (**26**) and discard. Remove the spacer (**16**) and lower bearing (**9**). Clean and examine these components and the upper bearing replacing any that show signs of damage or deterioration.

4.5.5 **Extended bonnet DN15-100 (Fig. 14)**
Remove the upper guide (**9**) and retain, withdraw the graphite packing (**26**) and carefully dispose of. Clean and examine these component and replacing any that show signs of damage or deterioration.

4.5.6 Clean the gland cavity

4.5.7 Reassemble the gland components in the order shown here.



The lower bearing must be fitted with the radiused edge downwards.

When fitting the graphite seals, the scarf joint in each seal must be offset from the one below by 90° (Fig. 11)

4.5.8 Apply a slight smear of anti-seize lubricant to the gland nut threads before screweing it in two or three turns. At this stage the packing must not be significantly compressed.

4.5.9 Final adjustment of the gland must be carried out after refitting the bonnet as detailed in Section 4.7.

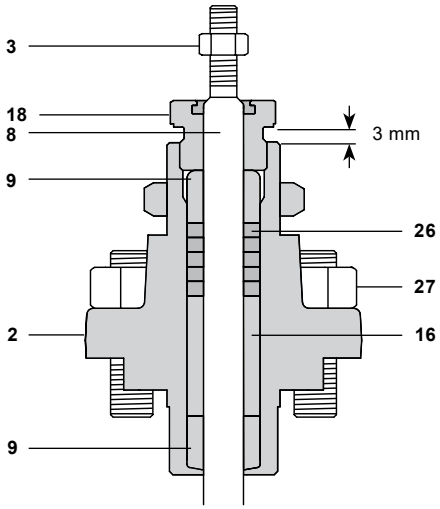

Fig. 10

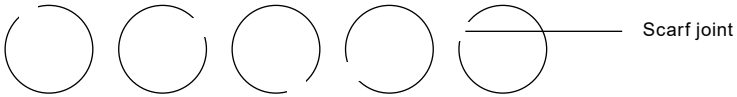

Fig. 11

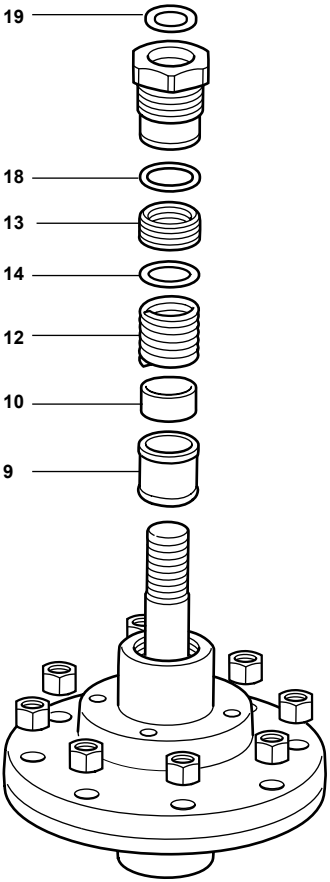

Fig. 12

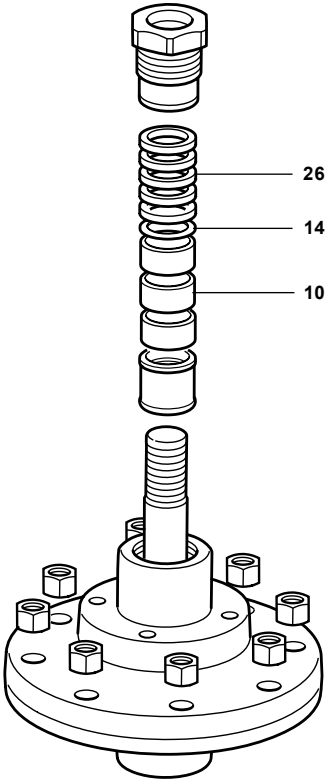

Fig. 13

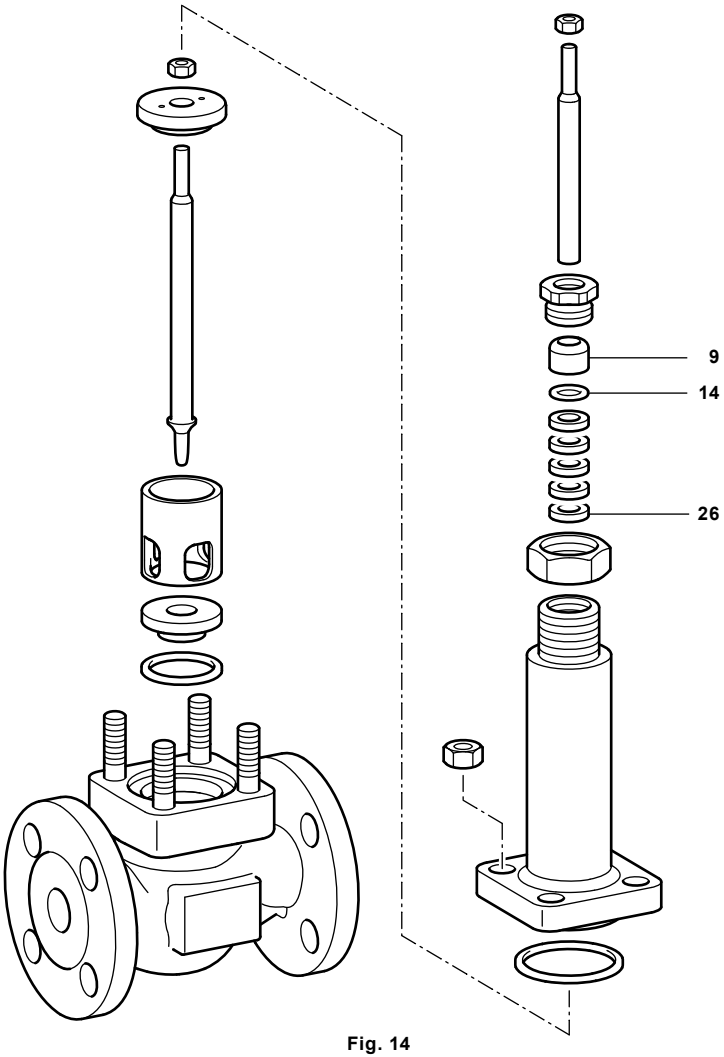

Fig. 14

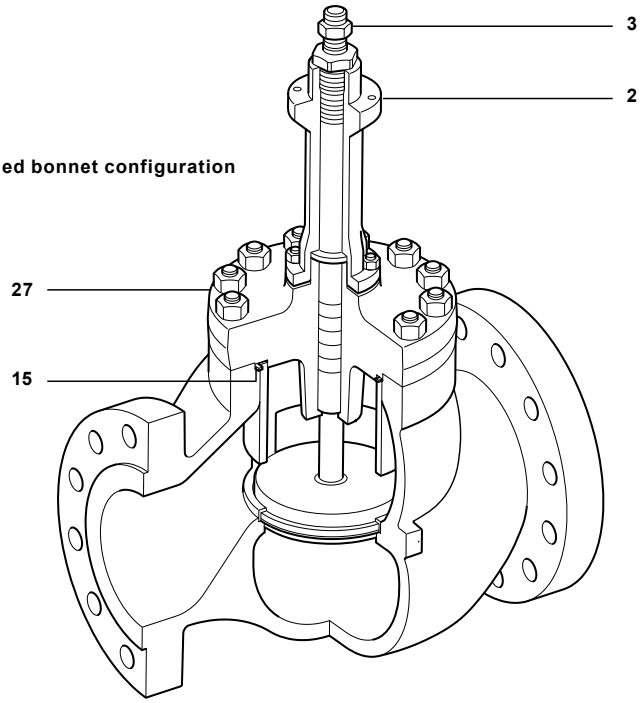

Fig. 15 Extended bonnet configuration

4.6 Removal and refitting of the valve plug/stem assembly and seat

4.6.1 Lift out the seat retaining cage (**5**) followed by the seat (**6**).Don't damage the seat during dis-assembly.

4.6.2 Remove the seat gasket (**7**) and carefully dispose of.

4.6.3 Clean all components, including the seat recess in the valve body. Ensure graphite from seat gasket is remove from seat and body.

4.6.4 Examine the seat and plug/stem assembly for damage or deterioration and renew as necessary. For C Seat option reverse the seat. For extended option DN15-100 plug/stem assembly should be screw and set according to dimension Fig. 18.

Score marks or scaly deposits on the valve stem will lead to early failure of the gland seal and damage to seat and plug sealing face will result in leakage rates higher than these specified for the valve.

4.6.5 Fit a new seat gasket (**7**) in the body seat recess followed by the seat (**6**).

4.6.6 Refit the cage (**5**) ensuring that the flow windows are lower most and that it sits squarely on the seat without impinging on the valve body.

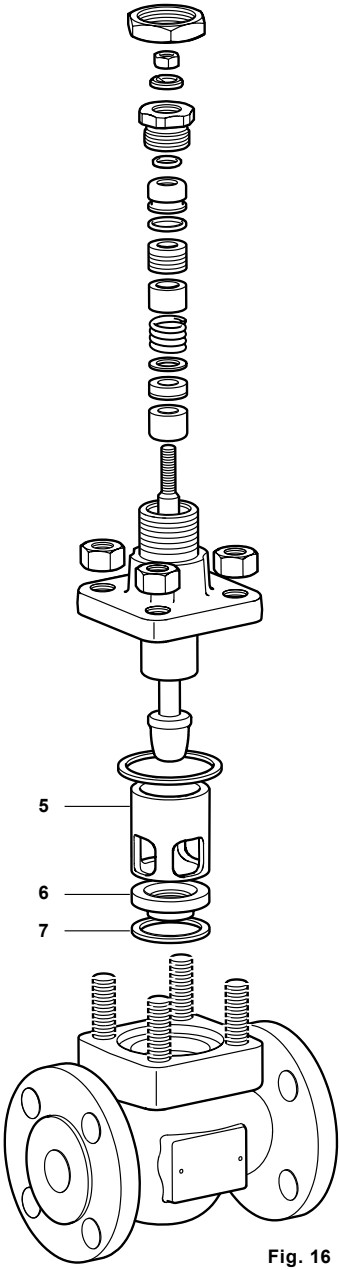

Fig. 16

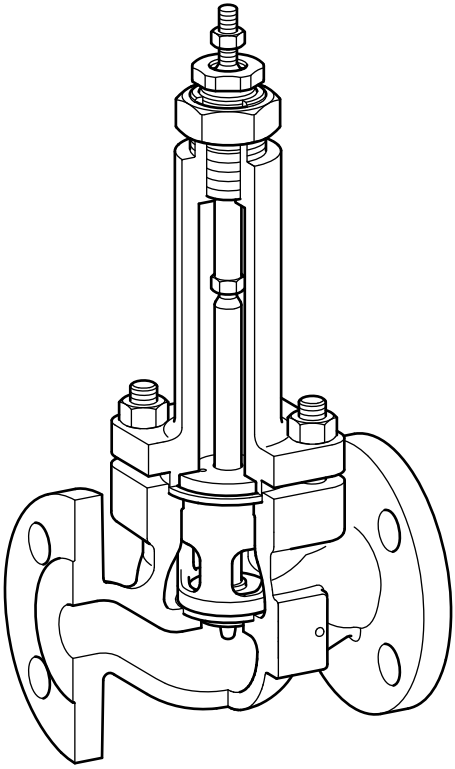

Fig. 17

4.7 Refitting the bonnet

The following must be carefully followed to enable the correct reassembly of the control valve and the subsequent test that is required to ensure that the plug moves freely into the valve seat.

4.7.1 Fit new bonnet gasket.

4.7.2 For PTFE packing version, apply a light smear of silicon grease at the top of the plug prior to insert it on the cover. Graphite packing version should not have silicon grease on it.

4.7.3 Ensure the plug stem is fully extended without the upper stem threads making contact with stem seals on the top of the bonnet.

4.7.4 Replace the bonnet and stem assembly to the valve body, locating the plug centrally into the seat.

4.7.5 Holding the Plug in position, push the bonnet down on to the valve body.

4.7.6 Proceed to tighten the bonnet into position by following Step 1 through to 7:



Fit bonnet nuts.



Finger tighten opposing bonnet nuts or bolts evenly in pairs.



Raise the stem to the highest position.



Firmly and briskly push the stem fully down.

Repeat Steps 1 to 4 finger tightening bonnet nuts or bolts individually until tight.



Using a spanner lightly and evenly tighten each bolt or nut by 45°, following the sequence illustrated in Figure 5.

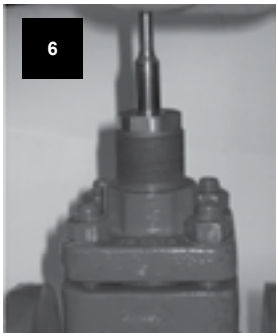

After each tightening sequence lift the stem fully.



Firmly and briskly push the stem fully down.

4.7.6 Repeat Steps 5, 6 and 7 until the bonnet nuts or bolts have an even tension.

4.7.7 Continue Steps 5, 6 and 7 but use a torque wrench set at 10% of maximum required torque setting.

4.7.8 Again, repeat Steps 5, 6 and 7, incrementally increasing the torque value to 20%, 40%, 60%, 80% and finally 100% of the required torque value (as specified in Table 1).

4.7.9 Pull the plug off its seat, rotate by 120° and slowly push it back down into the seat checking for any signs of resistance as the plug comes into contact with the seat.

4.7.10 Repeat the above Step, three more times.

4.7.11 If any resistance is felt, this can indicate the plug and seat is misaligned and the process will need repeating.

4.7.12 Tighten the gland nut (**18**) until:

i) PTFE gland assembly: Metal to metal contact with the bonnet. Torque to 20 Nm for DN15 to DN100 and 50 Nm for DN125 to DN200.

ii) Graphite gland assembly: A gap of 3 mm between the underside of the gland nut and the bonnet is achieved. See Figure 12.

4.7.13 Refit the lock-nut (**3**).

4.7.14 Reinstall the actuator.

4.7.15 Bring the valve back into service.

4.7.16 Check for leakage at the gland.

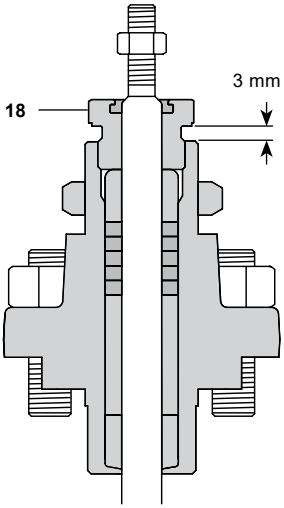

Fig. 18

Recheck the graphite seals and re-tighten the gland if necessary after a few hundred cycles as the seals fully bed in.

4.8 Bellows sealed valves



These valves are fitted with a bellows stem seal as the primary seal together with a graphite stem seal. Any leakage from the stem will indicate a failure of the bellows seal.



Before commencement of any work to inspect or maintain the Spira-trol™ valve, please read to Section 1 “Safety Information”.

Ensure the valve is depressurised and clear of media.

Ensure that the valve is correctly isolated from pressure both upstream and downstream.

Ensure that the control system is correctly isolated.

4.8.1 Remove the actuator from the valve. Refer to the Installation and Maintenance Instructions covering Spirax-Sarco actuators.

4.8.2 Remove in order: lock-nut (**3**), gland nut (**18**), gland nut spacer (**20**), the anti-rotation pin (**16**).

4.8.3 Remove the bonnet nuts (**27**) the bellows housing (**2**). Remove bonnet and bellows, alternatively if the bellows are to remain in place then apply pressure to stem and remove bonnet.

4.8.4 Remove the bellows assembly (**22**), cage (**5**), the seat (**6**) and the gasket (**7**).

4.8.5 Clean the gasket surfaces (**7**) seat (**6**) bonnet gasket (**12**), then remove graphite packing rings (**26**).

4.8.6 Re-assemble in order: gasket (**7**), seat (**6**), cage (**5**), bonnet gasket (**12**), bellows assembly (**22**), the bellows cover gasket (**13**).

4.8.7 Clean the internals of the bellows housing (**2**) with particular attention to the mating surfaces of the bellows cover gasket.

4.8.8 Fit the bellows housing (**2**) ensuring that the hole in the anti-rotation pin (**16**) aligns with the milled flat on the bellows assembly (**22**).

4.8.9 Screw in the anti-rotation pin (**16**) until finger tight, screw the gland nut spacer (**20**) and tighten to the torque indicated in Table 1. Insert new graphite packing rings (**26**) and screw the gland nut (**9**).

4.8.10 Push the plug on to the seat to obtain correct alignment of the parts, then tighten in sequence to the torque previewed in Table 1. Re-fit bonnet nuts (**27**) and bellows housing (**2**).

4.8.11 Re-fit the actuator. Refer to the Installation and Maintenance Instructions covering Spirax-Sarco actuators. Attention: In order to avoid damage to the bellows, do not rotate the stem.

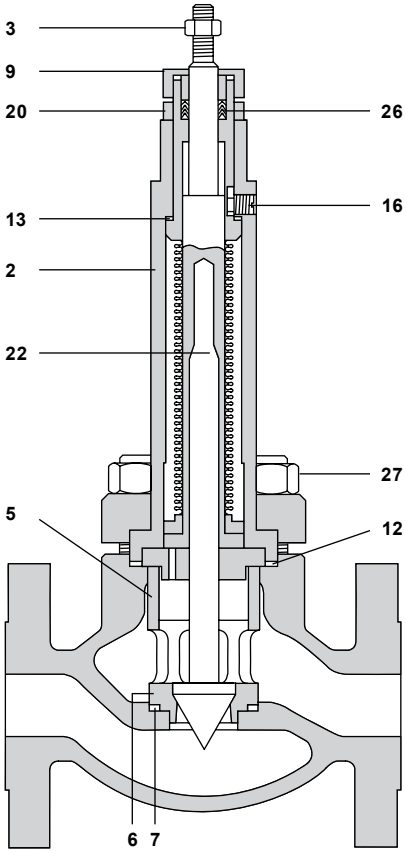

Fig. 21

Important : ensure that the correct gasket set is ordered when maintaining or replacing the bellows stem seal.

Do not rotate the stem of the bellows sealed valves. This will lead to permanent and irreparable damage to the bellows seal.

4.9 Balanced valves



Before commencement of any work to inspect or maintain the Spira-trol™ valve, please read to Section 1 “Safety Information”.

Ensure the valve is depressurised and clear of media.

Ensure that the valve is correctly isolated from pressure both upstream and downstream.

Ensure that the control system is correctly isolated.

Take care when removing the bonnet / trim – the friction can result in the cage being temporarily stuck to the plug with no physical means of restraint in the lifting process.

4.9.1 Using lifting equipment as appropriate, withdraw the plug/stem assembly (**8**) taking care not to let the cage fall back into the valve body.

4.9.2 Remove and carefully dispose of the upper cage seal (**19**).

4.9.3 Remove and carefully dispose of the balance seal (**31**).

4.9.4 Lift out the seat (**6**).

4.9.5 Remove the seat gasket (**7**) and carefully dispose of.

4.9.6 Clean all the components, including the seat recess in the valve body.

4.9.7 Examine the cage, seat and plug/stem assembly for damage or deterioration and renew as necessary.



Score marks or scaly deposits on the valve stem will lead to early failure of the gland seal and damage to seat and plug sealing face will result in leakage rates higher than these specified for the valve.

4.9.8 Fit a new seat gasket (**7**) in the body seat recess followed by the seat (6).

4.9.9 Refit the cage (**5**) ensuring that the flow windows are lower most and that it sits squarely on the seat without impinging on the valve body.

4.9.10 Fit a new balance seal (**31**) into the plug groove.

4.9.11 Refit the plug/stem into the cage ensuring that the balanced seal is not damaged during this process - The plug/stem assembly should easily move up and down in the cage, using moderate hand force, until it is located in the seat.

4.9.12 Fit a new upper cage seal (**19**).

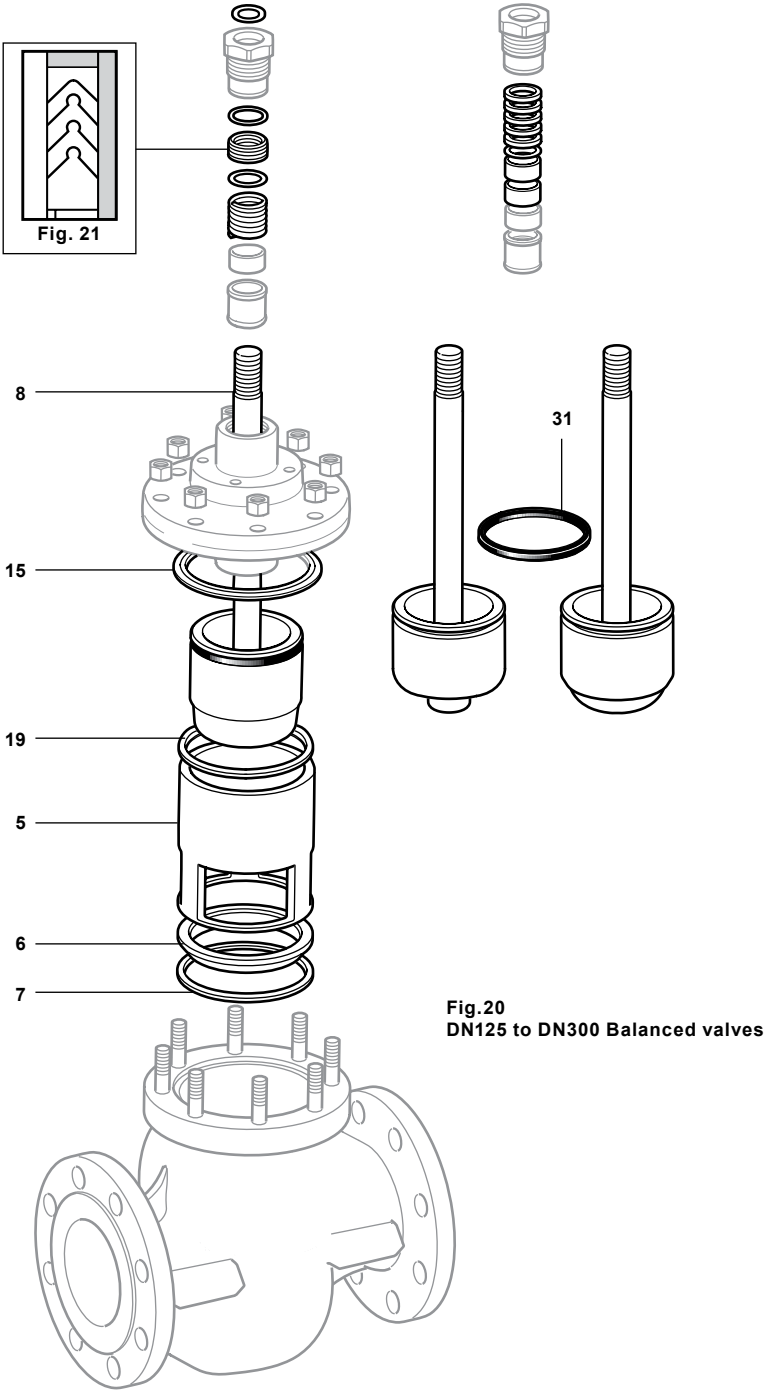

Fig.20
DN125 to DN300 Balanced valves

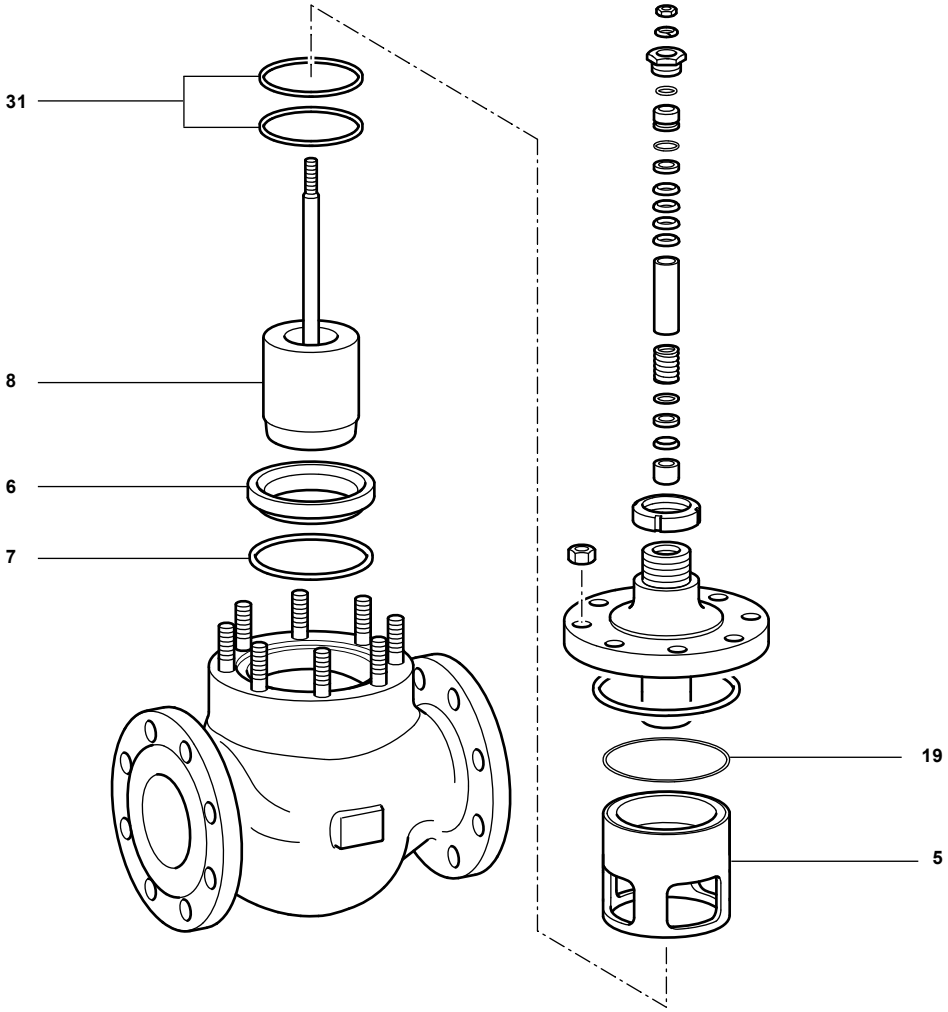

Fig. 21 DN65 to DN100 Balanced valves

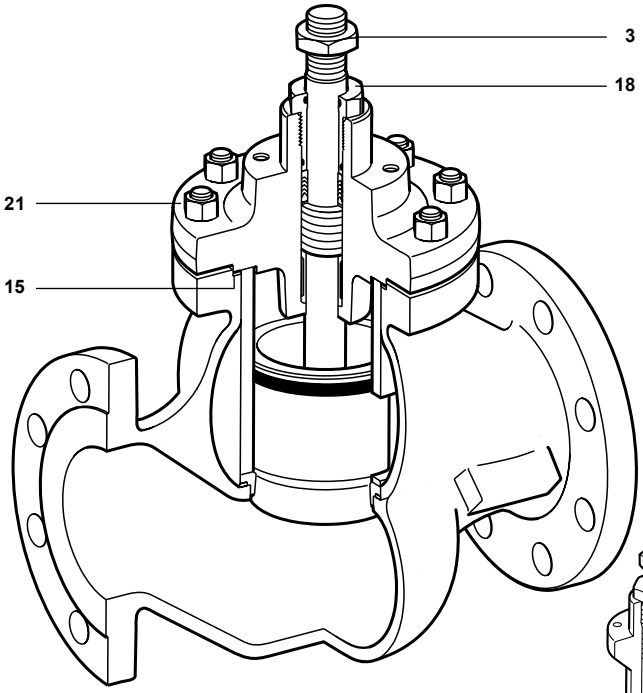

Fig. 22 Balanced valve shown

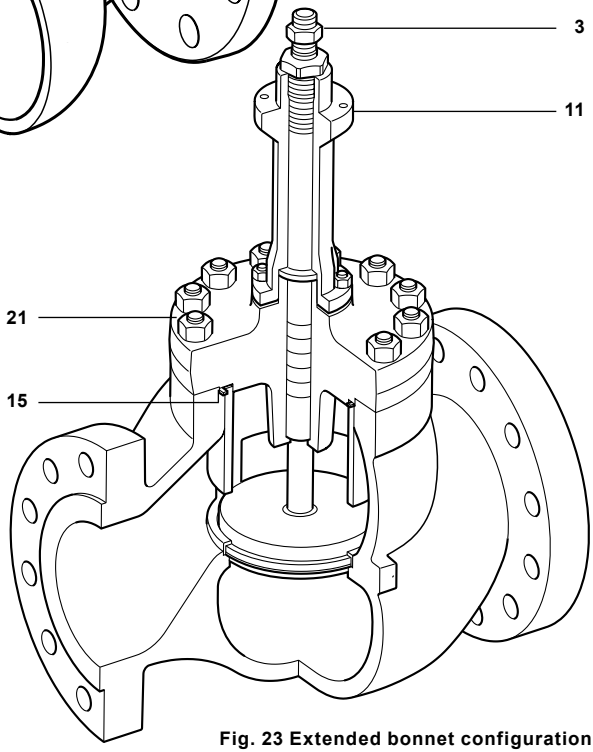

Fig. 23 Extended bonnet configuration

5. Spare parts

5.1 Spare parts

DN15 to DN100 Spira-trol™

The spare parts available are shown in solid outline. Parts drawn in a grey line are not supplied as spares.



When placing an order for spare parts please specify clearly the full product description and date code as found on the label of the valve body, as this will ensure that the correct spare parts are supplied.

Only Spirax Sarco genuine spare parts must be used.

Available spares - K and L series

Actuator clamping nut		**A**
Gasket set (Non-bellows sealed)		**B, G**
Stem seal kits	**PTFE** chevrons and gasket set	**C**
	Graphite packing and gasket set	**C2**
PTFE to Graphite conversion kit		**C1**
Plug stem	***Equal percentage trim** (No gaskets supplied)	**D, E**
	Fast opening trim and seat kit (No gaskets supplied)	**D1, E**
	Linear trim (No gaskets supplied)	**D2, E**
Stem packing and gasket		**B, G, C1**
		B, G, C
		B, G, C2
Balanced seal set (part not shown)		

* Specify if reduced trim.

How to order spares
Always order spares by using the description given in the column headed 'Available spares', and state the size and type of valve including the full product description of the product.

Example: 1 - PTFE stem seal kit for a Spirax Sarco 1" Spira-trolTM two-port LEA31 PTSUSS.2 Cv 12 control valve.

How to fit spares
Full fitting instructions are given in the Installation and Maintenance Instructions supplied with the spare.

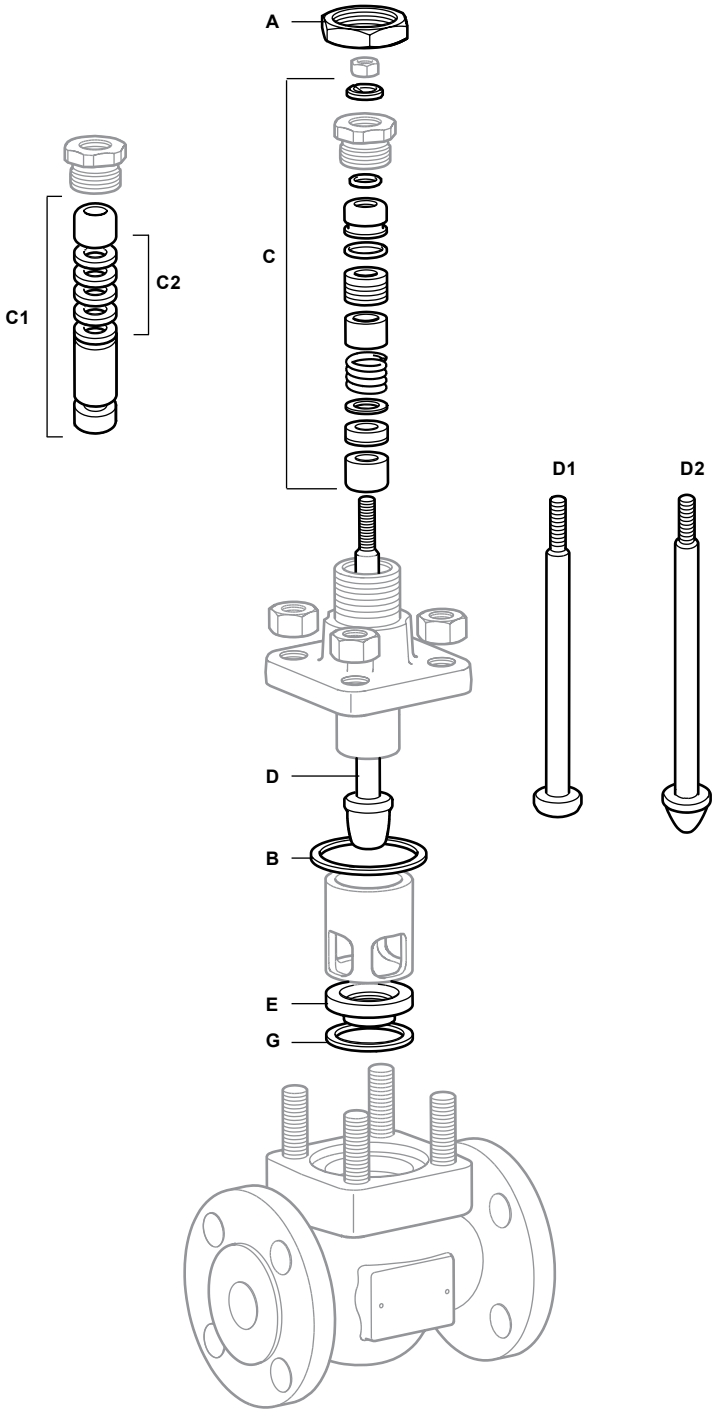

Fig. 24

5.2 Spare parts

Spira-trol™ with bellows seal (D)

The spare parts available are shown in solid outline. Parts drawn in a grey line are not supplied as spares.



When placing an order for spare parts please specify clearly the full product description and date code as found on the label of the valve body, as this will ensure that the correct spare parts are supplied.

Only Spirax Sarco genuine spare parts must be used.

Available spares - LEA_D, LFA_D and LLA_D

Actuator clamping nut			**A**
Gasket set (non-bellows sealed)			**B, G**
Stem seal kit	**Graphite** packing and gasket set		**C2**
Plug stem and seat kit	*** Equal percentage trim**	(No gaskets supplied)	**D3, E**
	Fast opening trim	(No gaskets supplied)	**D4, E**
	Linear trim	(No gaskets supplied)	**D5, E**
Bellows seal assembly			**F**
Balanced seal set (part not shown)			

* Specify if reduced trim.

How to order spares

Always order spares by using the description given in the column headed 'Available spares', and state the size and type of valve including the full product description of the product.

Example: 1 - PTFE stem seal kit for a Spirax Sarco 1" Spira-trol™ two-port LEA31 PTSUSS.2 Cv 12 control valve.

How to fit spares

Full fitting instructions are given in the Installation and Maintenance Instructions supplied with the spare.

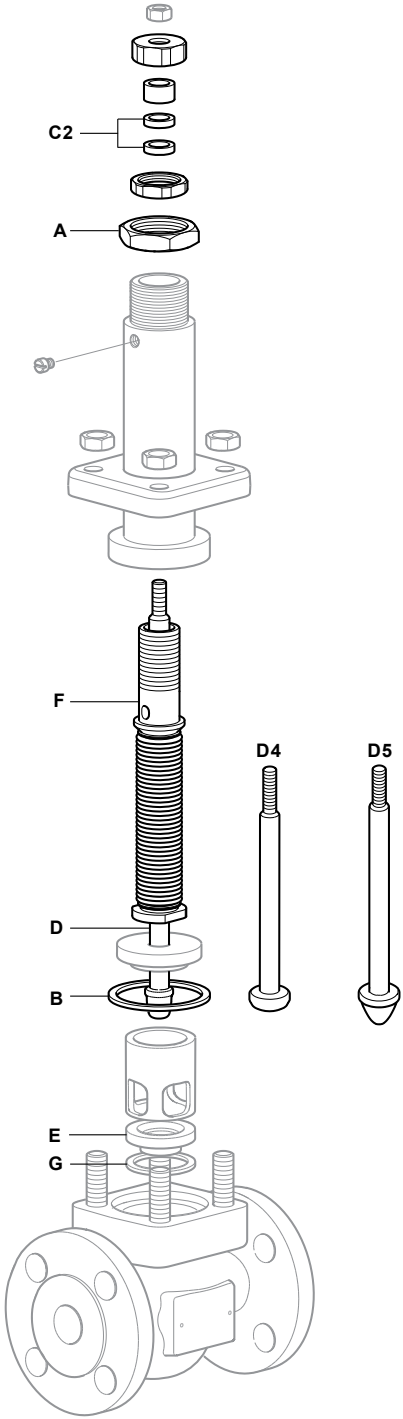

Fig. 25

5.3 Spare parts

Spira-trol™ STEAM TIGHT (C)

The spare parts available are shown in solid outline. Parts drawn in a grey line are not supplied as spares.

When placing an order for spare parts please specify clearly the full product description and date code as found on the label of the valve body, as this will ensure that the correct spare parts are supplied.

Only Spirax Sarco genuine spare parts must be used

Available spares – Specific to STEAM TIGHT (C)

Kit Description	Seat	Seat Gasket	Cover Gasket	Bellows Gasket	Cage	Plug
Conversion for valve before 2021	•	•	•	•	•	
Conversion for valve after 01/2021	•	•	•			
Conversion for bellow B&C and extended valve after 01/2021	•	•	•	•		
Cage					•	
Gasket		•	•			
Gasket for bellow B&C and extended valve		•	•	•		
Plug and seat	•					•

* Specify complete nomenclature of the valve.

How to order spares

Always order spares by using the description given in the column headed 'Available spares', and state the size and type of valve including the full product description of the product.

Example: 1 – Plug stem and seat kit for a Spirax Sarco DN25 Spira-trol two-port KE73 PCSUSS.2 Kv10 control valve.

How to fit spares

Full fitting instructions are given in the Installation and Maintenance Instructions supplied with the spare.

3800900	CONVERSION KIT C DN25 FAST OPENING & Hi Capacity
3800901	CONVERSION KIT C DN25 EQ% and LINEAR Full trim
3800902	CONVERSION KIT C DN20 FAST OPENING & Hi Capacity
3800903	CONVERSION KIT C DN15 FAST OPENING & HI Capacity, DN20 Full Trim and DN25 Reduction 1 trim
3800904	CONVERSION KIT C DN15 EQ% and LINEAR Full trim, DN20 Reduction 1 trim, DN25 Reduction 2 trim
3800905	CONVERSION KIT C DN15 EQ% and LINEAR Reduction 1 trim, DN20 Reduction 2 trim, DN25 Reduction 3 trim
3800906	CONVERSION KIT C DN15 EQ% and LINEAR Reduction 2 trim, DN20 Reduction 3 trim, DN25 Reduction 4 trim
3800907	CONVERSION KIT C DN15 EQ% and LINEAR Reduction 3 trim, DN20 Reduction 4 trim, DN25 Reduction 5 trim
3800908	CONVERSION KIT C DN50 FAST OPENING & Hi Capacity
3800909	CONVERSION KIT C DN40 FAST OPENING & HI Capacity, DN50 EQ% and LINEARFull Trim
3800910	CONVERSION KIT C DN40 EQ% and LINEAR Full Trim and DN50 Reduction 1 trim
3800911	CONVERSION KIT C DN32 FAST OPENING & Hi Capacity
3800912	CONVERSION KIT C DN32 EQ% and LINEAR Full trim, DN40 Reduction 1 trim, DN50 Reduction 2 trim
3800913	CONVERSION KIT C DN32 EQ% and LINEAR Reduction 1 trim, DN40 Reduction 2 trim, DN50 Reduction 3 trim
3800914	CONVERSION KIT C DN32 EQ% and LINEAR Reduction 2 trim, DN40 Reduction 3 trim, DN50 Reduction 4 trim
3800915	CONVERSION KIT C DN32 EQ% and LINEAR Reduction 3 trim, DN40 Reduction 4 trim, DN50 Reduction 5 trim
3800916	CONVERSION KIT C DN80 Hi Capacity and Full Trim
3800917	CONVERSION KIT C DN65 Hi Capacity and Full Trim, DN80 Reduction 1 trim
3800918	CONVERSION KIT C DN65 Reduction 1 Trim, DN80 Reduction 2 trim
3800919	CONVERSION KIT C DN65 Reduction 2 Trim, DN80 Reduction 3 trim
3800920	CONVERSION KIT C DN65 Reduction 3 Trim, DN80 Reduction 4 trim
3800921	CONVERSION KIT C DN100 Full trim
3800922	CONVERSION KIT C DN100 Reduction 1 trim
3800923	CONVERSION KIT C DN100 Reduction 2 trim
3800924	CONVERSION KIT C DN100 Reduction 3 trim

5.4 Spare parts

DN125 to DN300 Spira-trol™ unbalanced valve

The spare parts available are shown in solid outline. Parts drawn in broken line are not supplied as spares.

When placing an order for spare parts please specify clearly the full product description and date code as found on the label of the valve body, as this will ensure that the correct spare parts are supplied.

Only Spirax Sarco genuine spare parts must be used.

Available spares - K series only

Gasket set		**B, G**
Stem seal	**PTFE** chevrons	**C**
kits	**Graphite** packing	**C2**
PTFE to Graphite conversion kit		**C1**
Plug stem	*** Equal percentage trim** (No gaskets supplied)	**D, E**
	Fast opening trim and seat kit (No gaskets supplied)	**D1, E**
	Linear trim (No gaskets supplied)	**D2, E**
Cage		**I**
Actuator clamping bolt (part not shown)		

* Specify if reduced trim.

How to order spares

Always order spares by using the description given in the column headed 'Available spares', and state the size and type of valve including the full product description of the product.

Example: 1 - PTFE stem seal kit for a Spirax Sarco DN150 Spira-trolTM two-port PTSUSS.2 K_V 370 control valve.

How to fit spares

Full fitting instructions are given in the Installation and Maintenance Instructions supplied with the spare.

Total number of spacers	
PTFE sealed valves	**DN125** valves = 0 spacer
	DN150 valves = 1 spacer
	DN200 **DN250** valves = 4 spacers **DN300**
Graphite sealed valves	**DN125** valves = 2 spacers
	DN150 valves = 3 spacers
	DN200 **DN250** valves = 6 spacers **DN300**

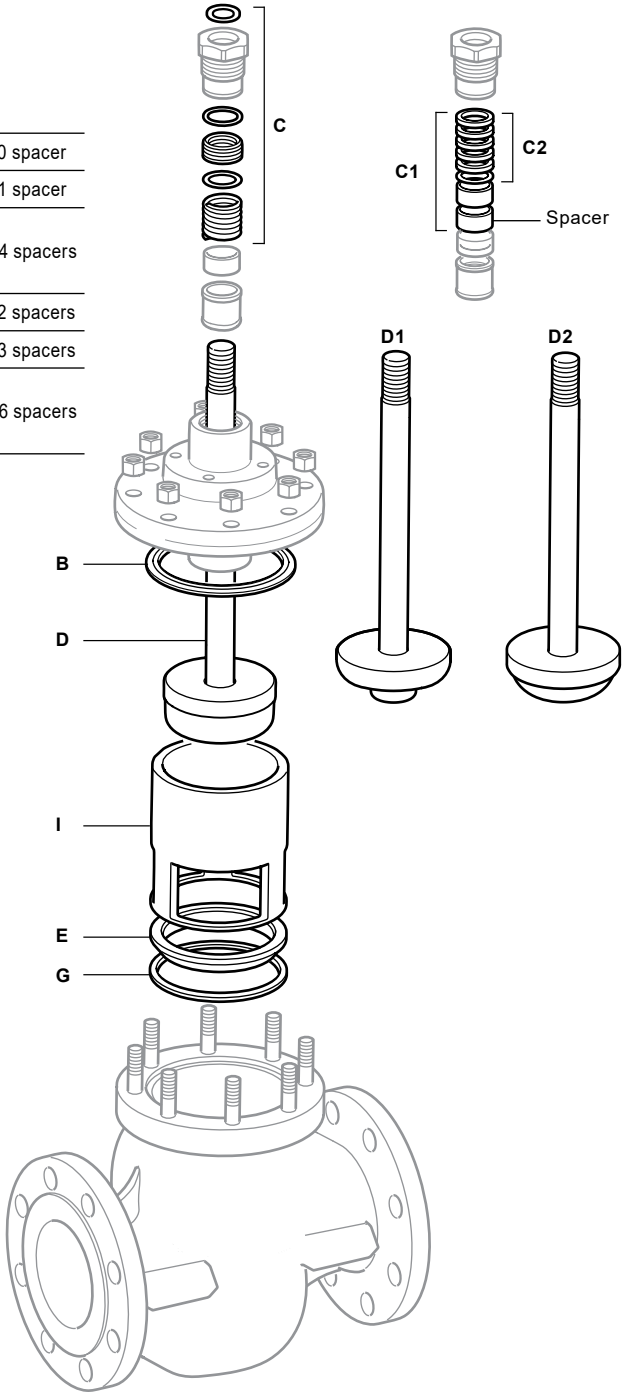

Fig. 26 Unbalanced

5.5 Spare parts

DN125 to DN300 Spira-trol™ balanced

The spare parts available are shown in solid outline. Parts drawn in broken line are not supplied as spares.



When placing an order for spare parts please specify clearly the full product description and date code as found on the label of the valve body, as this will ensure that the correct spare parts are supplied.

Only Spirax Sarco genuine spare parts must be used.

Available spares - K series only

Gasket set		**A, B, G, F**
Stem seal kits	**PTFE** chevrons	**C**
	Graphite packing	**C2**
PTFE to Graphite conversion kit		**C1**
Plug stem and seat kit	* **Balanced equal percentage trim** (No gaskets supplied)	**A, D, E**
	Balanced fast opening trim (No gaskets supplied)	**A, D1, E**
	Balanced linear trim (No gaskets supplied)	**A, D2, E**
Cage		**I**
Actuator clamping bolt (part not shown)		

* Specify if reduced trim.

How to order spares

Always order spares by using the description given in the column headed 'Available spares', and state the size and type of valve including the full product description of the product.

Example: 1 - PTFE stem seal kit for a Spirax Sarco DN150 Spira-trolTM two-port KE43 PTSBSS.2 Kv 370 control valve.

How to fit spares

Full fitting instructions are given in the Installation and Maintenance Instructions supplied with the spare.

Total number of spacers	
PTFE sealed valves	**DN125** valves = 0 spacer
	DN150 valves = 1 spacer
	DN200 **DN250** valves = 4 spacers **DN300**
Graphite sealed valves	**DN125** valves = 2 spacers
	DN150 valves = 3 spacers
	DN200 **DN250** valves = 6 spacers **DN300**

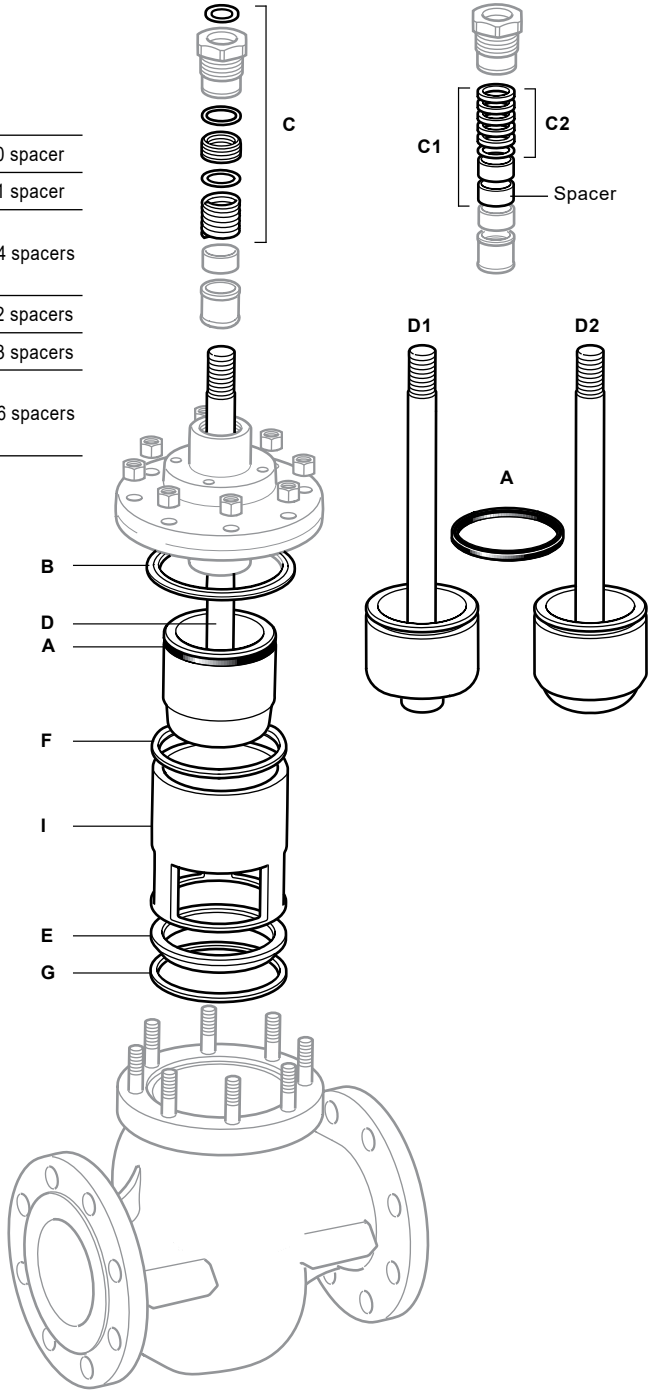

Fig. 27 Balanced

6. Fault finding

Symptoms	Possible cause	Remedial actions
Leakage on inlet or outlet	Loose bolt	Retorque correctly the flange if leakage still present, Dismantle the flange and clean and inspect flange gasket face, replace gasket and retorque correctly the flange
	Incorrect bolting used	Dismantle the flange and clean and inspect flange gasket face, replace gasket and bolting and retorque correctly the flange
	Incorrect gasket used	Dismantle the flange and clean and inspect flange gasket face, replace gasket and retorque correctly the flange
	Gasket damage	Dismantle the flange and clean and inspect flange gasket face, replace gasket and retorque correctly the flange
	Flange gasket face damage or unclean	Dismantle the flange and clean and inspect flange gasket face, replace gasket and retorque correctly the flange
	Uncorrect welding for Socket weld connection	Remove the welding and re-do and Inspect welding using NDT like dye penetrant
	Pressure/temperature not adapt to connection	Check inlet pressure/temperature and refer to Technical sheet
Leakage between body and bonnet	Bonnet gasket is damage	Isolate the valve and proceed for gasket replacment (See maintenance section)
	Missing cover gasket after maintenance	
	Re-use of cover gasket during maintenance	
	Relaxation or undertorque of the bolting	Check the bonnet bolting torque
	Overpressure / temperature	Check the inlet pressure&temperature is in the correct pressure range
	Incorrect fluid passing through the valve	Check the fluid is compatible with the valve materials

Symptoms	Possible cause	Remedial actions
Leakage at top of the stem	Stem seals are damage	Isolate the valve and proceed to stem sealing mainetnance (See maintenance section)
	Stem seals wrongly maintain	
	Gland nut need retorque (on stem sealing option H, B, C, D)	Check you can stop the leakage by screwing gland nut.
	Overpressure / temperature	Check the inlet pressure&temperature is in the correct pressure range
	Incorrect fluid passing through the valve	Check the fluid is compatible with the valve materials
Leakage between extension and top cover (only on extended bonnet)	Bonnet gasket is damaged	Isolate the valve and proceed to gasket replacment (See maintenance section)
	Relaxation of the bolting torque	Check the bonnet bolting torque
	Overpressure / temperature	Check the inlet pressure&temperature is in the correct pressure range
	Incorrect fluid passing through the valve	Check the fluid is compatible with the valve materials
Leakage in anti-rotation screw (only on bellow D version)	Bellow gasket is damaged	Isolate the valve and proceed to gasket replacment (See maintenance section)
	Relaxation of the bolting torque of the bellow nut	Retorque correctly the bellow nut if leakage still present proceed to gasket replacment (See maintenance section)
	Overpressure / temperature	Check the inlet pressure&temperature is in the correct pressure range
	Incorrect fluid passing through the valve	Check the fluid is compatible with the valve materials
Leakage of the pressure containing shell	Erosion of the envelop	Isolate the valve and replace the product an evaluation of the root cause is needed

Symptoms	Possible cause	Remedial actions
Pressure or temperature of controlled variable rise when valve is closed	Seat erosion, damage to plug, debris trapped between the plug and seat	Proceed to valve inspection and maintenance as needed. (See maintenance section)
	Diaphragm or actuator stem seal leak	Proceed to actuator inspection and maintenance.
	Pneumatic supply leak	Check pneumatic supply
	Control signal interuption	Check control signal
	Electrical actuator failure	Proceed to actuator inspection and maintenance.
	Power supply interuption	Check power supply
	Positioner fault	Proceed to positioner inspection and maintenance or replacment.
	Seat gasket missing	Proceed to valve inspection and maintenance as needed. (See maintenance section)
	Relaxation or undertorque of the bolting	Check the bonnet bolting torque
	On seat option C, seat re-assemble on the 1st side after maintenance	Proceed to valve inspection and maintenance as needed. (See maintenance section)
	Seat gasket re-use during maintenance	
Valve internal un-maintenable due to disformation	Overtorque of body/ cover bolting	Proceed to valve inspection and maintenance as needed. (See maintenance section)
	Seat gasket install wrongly between cage and seat	
	Seat not correctly install into the body	
Uncontrollable pressure or temperature of the controlled variable	Cage missing after maintenance	Proceed to valve inspection and maintenance as needed. (See maintenance section)

Symptoms	Possible cause	Remedial actions
Non linear stem movement	Mis-maintenance of the stem packing	Proceed to valve inspection and maintenance as needed. (See maintenance section)
Poor control of the manipulated variable in response to control loop	Cage re-assemble upside down	Proceed to inspection and maintenance as needed. (See maintenance section)
	Actuator clamp nut undertorque	
	Stem lock nut missing or undertorque	
	Overpressure / temperature / flowrate	Check application data with sizing sheet. On proceed to valve inspection and maintenance as needed. (See maintenance section)
	Incorrect fluid passing through the valve	
Actuator moving or turning, plus possible increase of valve stroke, plus possible pressure or temperature of controlled varaible rise when valve is closed	Actuator clamp nut undertorque or loose	Proceed to inspection and maintenance as needed. (See maintenance section)
Stem to actuator coupling becomes loose - possible damage to stem or actuator (misalignment) / reduction of stroke / Pressure or temperature of controlled variable rise when valve is closed	Stem lock nut undertorque or loose	Proceed to inspection and maintenance as needed. (See maintenance section)
Air leakage at the air inlet connection (For pneumatic actuated valve)	Air connector defect	remove air connector, inspect it and replace it if needed, use PTFE tape on the screwed connection and rescrewed teh air connection
	Air connector connection damage	Proceed to actuator replacment
	Overpressure / temperature	Check inlet air pressure/temperature and refer to Technical sheet

Symptoms	Possible cause	Remedial actions
Air leakage at the actuator stem (For pneumatic actuated valve)	Stem seal is damage	Proceed to stem seal replacment
	Stem is damage	Check stem and proceed to acuator replacment if needed
	Overpressure / temperature	Check inlet air pressure/temperature and refer to Technical sheet
Air leakage at the actuator between yoke and bottom housing (For pneumatic actuated valve)	Yoke gasket is damage	Proceed to gasket replacement
	Bottom housing is disformed	Inspect the housing and proceed to actuator replacment if needed
	Yoke bolt not torque correctly	Check the torque and adjust if needed
	Overpressure / temperature	Check inlet air pressure/temperature and refer to Technical sheet
Air leakage at the actuator diaphragm area between top and bottom housing (For pneumatic actuated valve)	Diaphragm is damage	Proceed to diaphram replacment
	Bottom or top housing are disformed	Inspect the housing and proceed to actuator replacment if needed
	Diaphragm bolt not torque correctly	Check the torque and adjust if needed
	Overpressure / temperature	Check inlet air pressure/temperature and refer to Technical sheet
Continuous air leakage at the exhaust nut of the actuator (For pneumatic actuated valve)	Diaphragm is damage	Proceed to diaphram replacment.
	Overpressure / temperature	Check inlet air pressure/temperature and refer to Technical sheet
Valve slow to open or close	Pneumatic supply or exhaust restricted	Proceed to inspection and check speed with actuator Technical sheet