CA10S, CA14 and CA14S
Air and Gas Traps

Installation and Maintenance Instructions

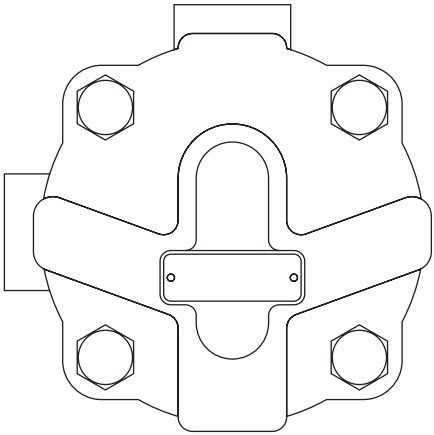

1. Safety information
2. General product information
3. Installation
4. Commissioning
5. Operation
6. Maintenance and spare parts

© Copyright 2026

Printed in GB

1. Safety information

Safe operation of these products can only be guaranteed if they are properly installed, commissioned, used and maintained by qualified personnel (see Section 11 within this document) in compliance with the operating instructions. General installation and safety instructions for pipeline and plant construction, as well as the proper use of tools and safety equipment must also be complied with.

1.1 Intended use

Referring to the Installation and Maintenance Instructions, name-plate and Technical Information Sheet, check that the product is suitable for the intended use/application. The products listed below comply with the requirements of the European Pressure Equipment Directive 2014/68/EU and carry the CE mark when so required.

The products fall within the following Pressure Equipment Directive categories:

Product		Group 2 Gases	Group 2 Liquids
CA10S		SEP	SEP
CA14/CA14S	DN15 - 20	SEP	SEP
	DN25 - 40	SEP	SEP
	DN50	CAT 1	CAT 1

i) The products have been specifically designed for use on air or water/condensate which are in Group 2 of the above mentioned Pressure Equipment Directive.

ii) Check material suitability, pressure and temperature and their maximum and minimum values. If the maximum operating limits of the product are lower than those of the system in which it is being fitted, or if malfunction of the product could result in a dangerous overpressure or overtemperature occurrence, ensure a safety device is included in the system to prevent such over-limit situations.

iii) Determine the correct installation situation and direction of fluid flow.

iv) Spirax Sarco products are not intended to withstand external stresses that may be induced by any system to which they are fitted. It is the responsibility of the installer to consider these stresses and take adequate precautions to minimise them.

v) Remove protection covers from all connections before installation.

1.2 Access

Ensure safe access and if necessary a safe working platform (suitably guarded) before attempting to work on the product. Arrange suitable lifting gear if required.

1.3 Lighting

Ensure adequate lighting, particularly where detailed or intricate work is required.

1.4 Hazardous liquids or gases in the pipeline

Consider what is in the pipeline or what may have been in the pipeline at some previous time. Consider: flammable materials, substances hazardous to health, extremes of temperature.

1.5 Hazardous environment around the product

Consider: explosion risk areas, lack of oxygen (e.g. tanks, pits), dangerous gases, extremes of temperature, hot surfaces, fire hazard (e.g. during welding), excessive noise, moving machinery.

1.6 The system

Consider the effect on the complete system of the work proposed. Will any proposed action (e.g. closing isolation valves, electrical isolation) put any other part of the system or any personnel at risk?
Dangers might include isolation of vents or protective devices or the rendering ineffective of controls or alarms. Ensure isolation valves are turned on and off in a gradual way to avoid system shocks.

1.7 Pressure systems

Ensure that any pressure is isolated and safely vented to atmospheric pressure. Consider double isolation (double block and bleed) and the locking or labelling of closed valves. Do not assume that the system has depressurised even when the pressure gauge indicates zero.

1.8 Temperature

Allow time for temperature to normalise after isolation to avoid danger of burns.

1.9 Tools and consumables

Before starting work ensure that you have suitable tools and/or consumables available. Use only genuine Spirax Sarco replacement parts.

1.10 Protective clothing

Consider whether you and/or others in the vicinity require any protective clothing to protect against the hazards of, for example, chemicals, high/low temperature, radiation, noise, falling objects, and dangers to eyes and face.

1.11 Permits to work

All work must be carried out or be supervised by a suitably competent person.
Installation and operating personnel should be trained in the correct use of the product according to the Installation and Maintenance Instructions.
Where a formal 'permit to work' system is in force it must be complied with. Where there is no such system, it is recommended that a responsible person should know what work is going on and, where necessary, arrange to have an assistant whose primary responsibility is safety.
Post 'warning notices' if necessary.

1.12 Handling

Manual handling of large and/or heavy products may present a risk of injury. Lifting, pushing, pulling, carrying or supporting a load by bodily force can cause injury particularly to the back. You are advised to assess the risks taking into account the task, the individual, the load and the working environment and use the appropriate handling method depending on the circumstances of the work being done.

1.13 Residual hazards

In normal use the external surface of the product may be very hot. If used at the maximum permitted operating conditions the surface temperature of some products may reach temperatures in excess of 250 °C (482 °F).
Many products are not self-draining. Take due care when dismantling or removing the product from an installation (refer to 'Maintenance instructions').

1.14 Freezing

Provision must be made to protect products which are not self-draining against frost damage in environments where they may be exposed to temperatures below freezing point.

1.15 Safety information

See the relevant Sections of the attached Installation and Maintenance Instructions for specific details relating to these products.

1.16 Disposal

Unless otherwise stated in the Installation and Maintenance Instructions, this product is recyclable and no ecological hazard is anticipated with its disposal providing due care is taken.

Please visit the Spirax Sarco product compliance web pages
https://www.spiraxsarco.com/product-compliance
for up to date information on any substances of concern that may be contained within this product. Where no additional information is provided on the Spirax Sarco product compliance web page, this product may be safely recycled and/or disposed providing due care is taken. Always check your local recycling and disposal regulations.

1.17 Returning products

Customers and stockists are reminded that under EC Health, Safety and Environment Law, when returning products to Spirax Sarco they must provide information on any hazards and the precautions to be taken due to contamination residues or mechanical damage which may present a health, safety or environmental risk. This information must be provided in writing including Health and Safety data sheets relating to any substances identified as hazardous or potentially hazardous.

1.18 Working safely with cast iron products on steam

Cast iron products are commonly found on steam and condensate systems. If installed correctly using good steam engineering practices, it is perfectly safe. However, because of its mechanical properties, it is less forgiving compared to other materials such as SG iron or carbon steel. The following are the good engineering practices required to prevent waterhammer and ensure safe working conditions on a steam system.

Safe Handling

Cast Iron is a brittle material. If the product is dropped during installation and there is any risk of damage the product should not be used unless it is fully inspected and pressure tested by the manufacturer.

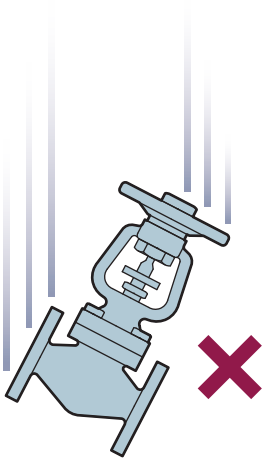

Prevention of waterhammer

Steam trapping on steam mains:

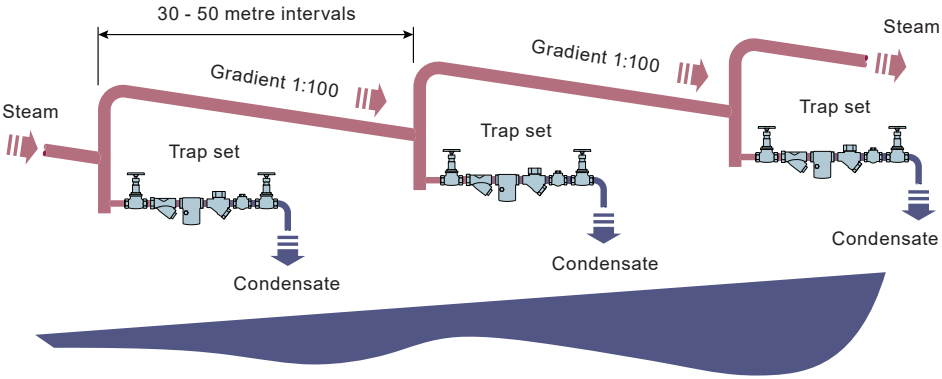

Steam Mains - Do's and Don'ts:

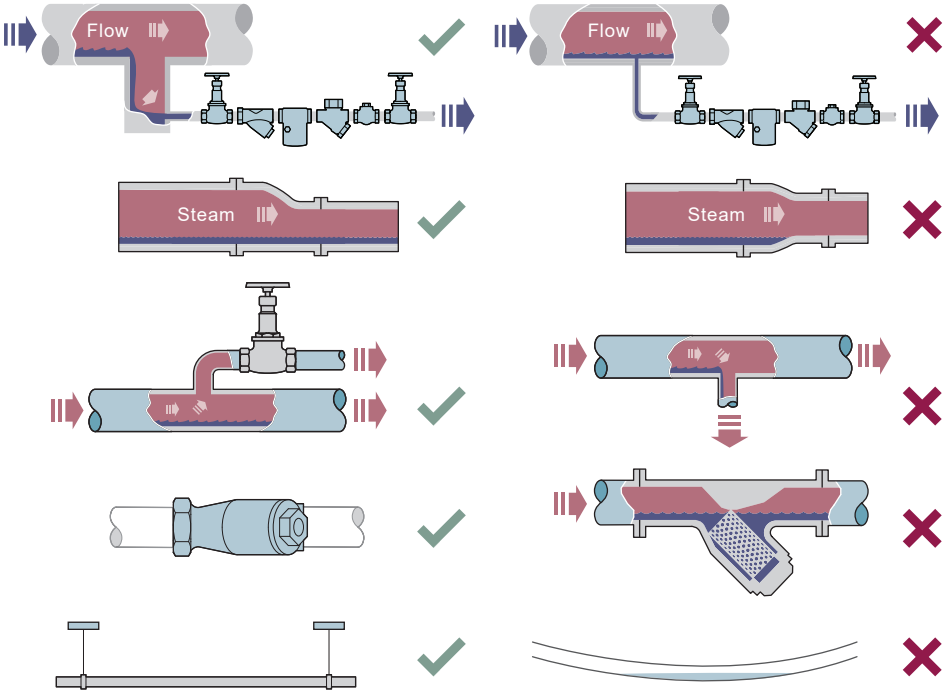

Prevention of tensile stressing

Pipe misalignment:

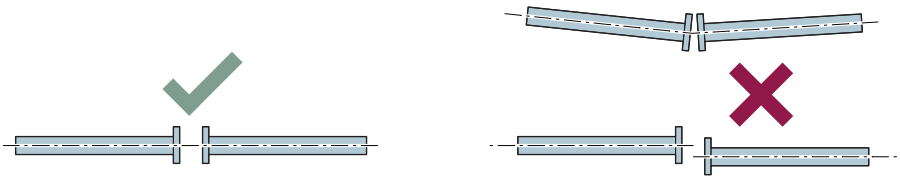

Installing products or re-assembling after maintenance:

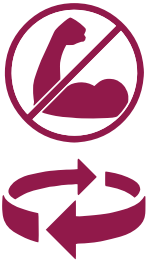

Do not over tighten.
Use correct torque figures.

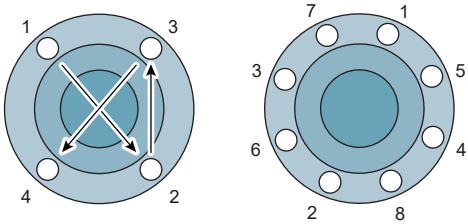

Flange bolts should be gradually tightened across diameters to ensure even load and alignment.

Prevention of tensile stressing continued on next page

Thermal expansion:

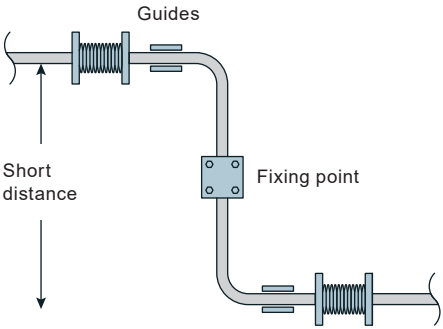

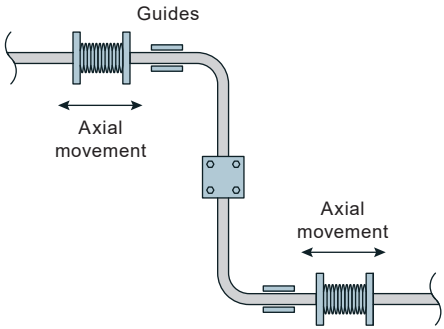

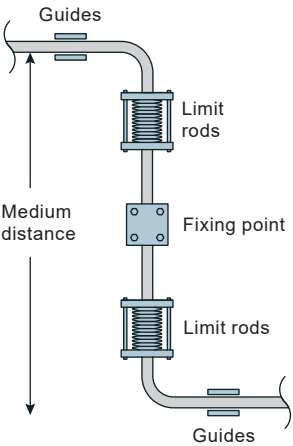

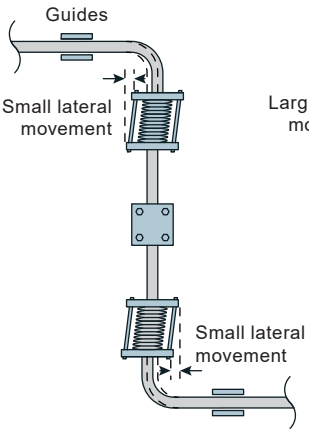

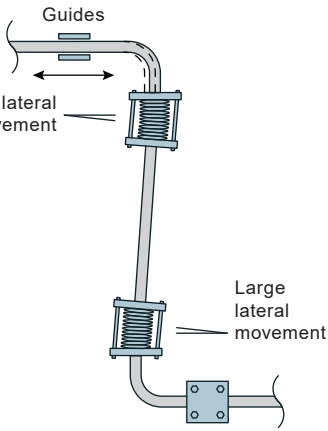

2. General product information

2.1 General description

CA10S	**(¾" screwed)** The CA10S is a float type automatic liquid drain trap for air and gas systems. It has a cast iron body and cover with stainless steel valve head for use on high temperature or where corrosive condensate would adversely affect a rubber valve.
CA14 and CA14S	**(½" and ¾" screwed and DN15, DN20 and DN25 flanged)** The CA14 is a range of float type automatic liquid drainers for air systems. The body and cover are of SG iron and the complete unit is readily maintainable. The standard version has a Viton valve cone, designated CA14. A stainless steel valve cone version is also available, designated CA14S.
	(DN15, DN20 and DN25 flanged only) The cover will be drilled and tapped ½" BSP T Rp (ISO 7-1) or NPT for the purpose of fitting a balance line. Both flanged versions are available with horizontal flanged connections with flow from right to left CA14 (R-L) or from left to right CA14 (L-R).
CA14S	**(DN40 and 50 flanged)** The CA14S is a cast iron ball float air and gas trap. It is available with a stainless steel valve cone given designation CA14S having horizontal flanged connections. The cover will be drilled and tapped ½" BSP T Rp (ISO 7-1) or NPT for the purpose of fitting a balance line.

Operating media

The CA10S, CA14 and CA14S are designed for use on air or gases within PED group 2.

Note: The CA10S, CA14 and CA14S are not suitable for use on PED group 1 liquids or gases.

Optional on all units

Drain cock tapping: The cover can be drilled and tapped ⅜" BSP T Rp (ISO 7-1) or NPT to enable a drain cock to be fitted.

Note: For additional information see the following Technical Information Sheets:

Product		Connection	Material	Section	TI reference
CA10S	¾"	Screwed	Cast iron	Section 2.2	**TI-P148-15**
CA14	½" and ¾"	Screwed	SG iron	Section 2.3	**TI-P148-12**
CA14S	½" and ¾"	Screwed	SG iron	Section 2.3	**TI-P148-36**
CA14 **CA14S**	DN15, DN20 and DN25	Flanged	SG iron	Section 2.4	**TI-P148-36**
CA14S	DN40 and DN50	Flanged	Cast iron	Section 2.5	**TI-P148-35**

2.2 CA10S - Cast iron

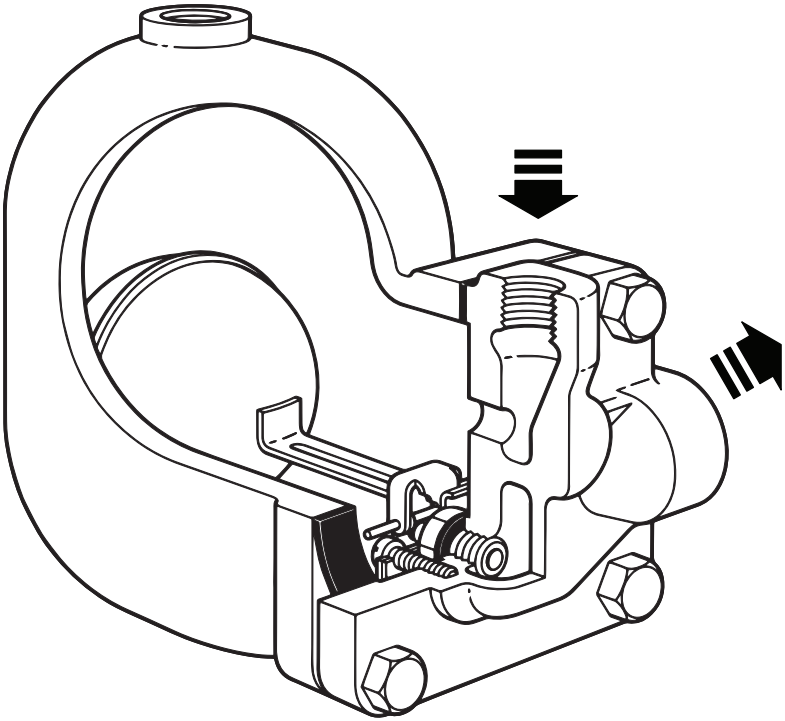

Fig. 1 ¾" screwed BSP T Rp (ISO 7-1)

Sizes and pipe connections

¾" screwed BSP T Rp (ISO 7-1) or NPT.
A ½" tapping is provided for a balance pipe.

Pressure/temperature limits

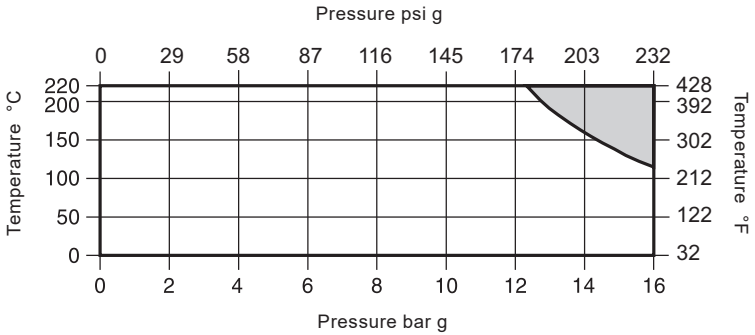

The product **must not** be used in this region.

Body design conditions					PN16	
PMA	Maximum allowable pressure @ 120 °C (248 °F)				16 bar g	(232 psi g)
TMA	Maximum allowable temperature				250 °C	(482 °F)
Minimum allowable temperature					0 °C	(32 °F)
PMO	Maximum operating pressure @ 120 °C (248 °F)				16 bar g	(232 psi g)
TMO	Maximum operating temperature @ 12.1 bar g (174 psi g)				220 °C	(428 °F)
Minimum operating temperature					0 °C	(32 °F)
	Maximum differential pressure bar, depending on the specific gravity of the liquid being drained:					
ΔPMX	**Specific gravity**	**1.0**	**0.9**	**0.8**	**0.7**	**Min. 0.6**
	ΔPMX bar	14.0	13.8	11.7	8.6	5.0
ΔPMN	Minimum differential pressure					0.1 bar
Product is safe for use under full vacuum conditions						
Designed for a maximum cold hydraulic test pressure of					24 bar g	(348 psi g)

2.3 CA14 and CA14S - SG iron

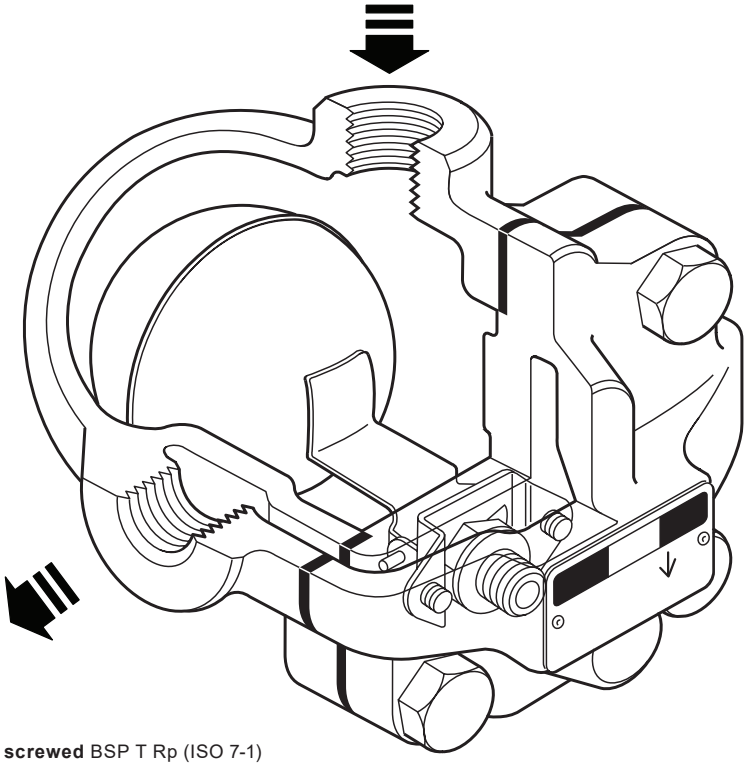

Fig. 2 ½" screwed BSP T Rp (ISO 7-1)

Sizes and pipe connections

½" and ¾" screwed BSP T Rp (ISO 7-1) or NPT.

Pressure/temperature limits

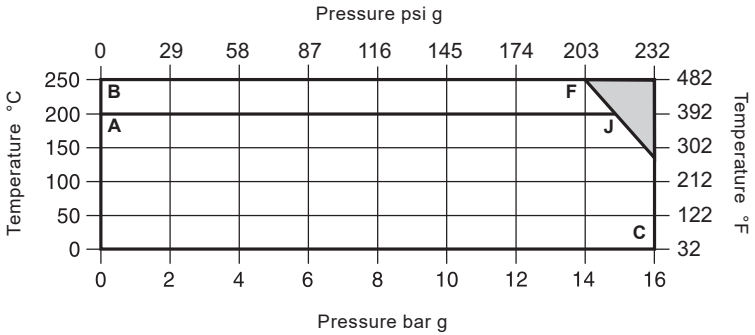

The product **must not** be used in this region.

A-J-C CA14 screwed BSP T Rp (ISO 7-1) or NPT.

B-F-C CA14S screwed BSP T Rp (ISO 7-1) or NPT.

Body design conditions							PN16
PMA	Maximum allowable pressure @ 120 °C (248 °F)					16 bar g	(232 psi g)
TMA	Maximum allowable temperature					250 °C	(482 °F)
Minimum allowable temperature						0 °C	(32 °F)
PMO	Maximum operating pressure @ 120 °C (248 °F)					16 bar g	(232 psi g)
TMO	Maximum operating temperature:	CA14 @ 14.7 bar g (213.15 psi g)				200 °C	(392 °F)
		CA14S @ 13.9 bar g (201.6 psi g)				250 °C	(482 °F)
Minimum operating temperature						0 °C	(32 °F)
ΔPMX	Maximum differential pressure bar, depending on the specific gravity of the liquid being drained:						
	Specific gravity	**1.0**	**0.9**	**0.8**	**0.7**	**Min. 0.6**	
	ΔPMX bar	14.0	14.0	14.0	9.0	5.0	
ΔPMN	Minimum differential pressure						0.1 bar
Product is safe for use under full vacuum conditions							
Designed for a maximum cold hydraulic test pressure of:						24 bar g	(348 psi g)

2.4 CA14 and CA14S - SG iron

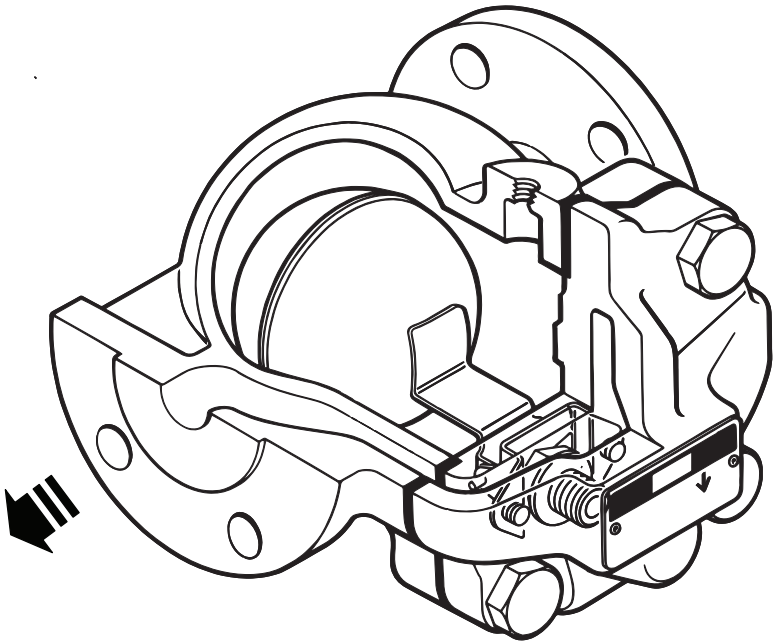

Fig. 3 DN20 flanged

Sizes and pipe connections

DN15, DN20 and DN25
Standard flange EN 1092 PN16,
ANSI 150 and JIS/KS 10.
A ½" tapping is provided for a balance pipe.

Pressure/temperature limits

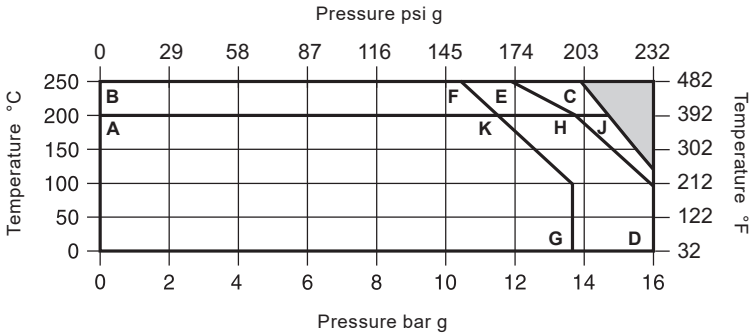

	The product **must not** be used in this region.
A-J-D	CA14 flanged PN16
A-K-G	CA14 flanged JIS/KS 10
A-H-D	CA14 flanged ANSI 150
B-C-D	CA14S flanged PN16
B-F-G	CA14S flanged JIS/KS 10
B-E-D	CA14S flanged ANSI 150

Body design conditions						PN16
PMA	Maximum allowable pressure @ 120 °C (248 °F)				16 bar g	(232 psi g)
TMA	Maximum allowable temperature				250 °C	(482 °F)
Minimum allowable temperature					0 °C	(32 °F)
PMO	Maximum operating pressure @ 120 °C (248 °F)				16 bar g	(232 psi g)
TMO	Maximum operating temperature:	CA14 @ 14.7 bar g (213.15 psi g)			200 °C	(392 °F)
		CA14S @ 13.9 bar g (201.6 psi g)			250 °C	(482 °F)
Minimum operating temperature					0 °C	(32 °F)
	Maximum differential pressure bar, depending on the specific gravity of the liquid being drained:					
ΔPMX	**Specific gravity**	**1.0**	**0.9**	**0.8**	**0.7**	**Min. 0.6**
	ΔPMX bar	14.0	14.0	14.0	9.0	5.0
ΔPMN	Minimum differential pressure					0.1 bar
Product is safe for use under full vacuum conditions						
Designed for a maximum cold hydraulic test pressure of:					24 bar g	(348 psi g)

2.5 CA14S

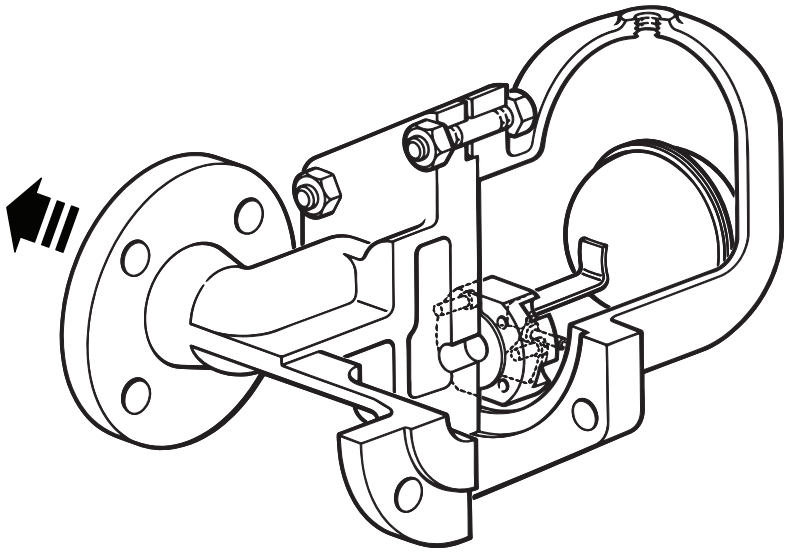

Fig. 4 DN40 flanged

Sizes and pipe connections

DN40 and DN50. Standard flanges are EN 1092 PN16.
On request ANSI B 16.1/ BS 1560 Class 125 and JIS/KS 10 flanges
can be provided with drilled and tapped bolt holes. A ½" tapping is provided for a balance pipe.
PN flanges will be provided with BSP T Rp (ISO 7-1) balance line and ANSI, JIS/KS with NPT balance pipe.

Pressure/temperature limits

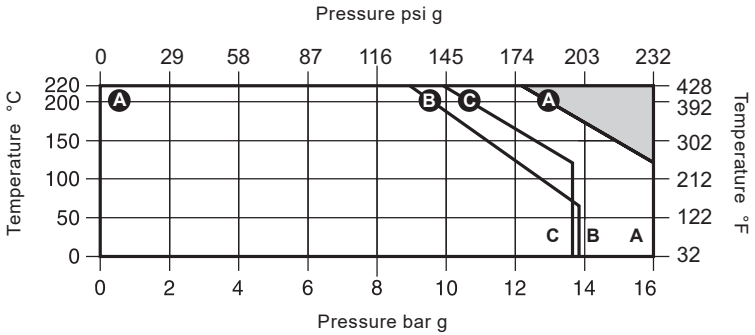

The product **must not** be used in this region.

A-A-A Flanged EN 1092 PN16

A-B-B Flanged ANSI B 16.1/BS 1560 Class 125 having flat faces

A-C-C Flanged JIS/KS 10

Body design conditions							PN16
PMA	Maximum allowable pressure @ 120 °C (248 °F)					16 bar g	(232 psi g)
TMA	Maximum allowable temperature					220 °C	(482 °F)
Minimum allowable temperature						0 °C	(32 °F)
PMO	Maximum operating pressure @ 120 °C (248 °F)					16 bar g	(232 psi g)
TMO	Maximum operating temperature @ 12.2 bar g (176.9 psi g)					220 °C	(392 °F)
Minimum operating temperature						0 °C	(32 °F)
ΔPMX	Maximum differential pressure bar, depending on the specific gravity of the liquid being drained:						
	Specific gravity	**1.0**	**0.9**	**0.8**	**0.7**	**Min. 0.6**	
ΔPMX	**CA14S-4.5**	4.5	4.5	4.5	3.4	2.0	
	CA14S-10	10.0	9.5	6.8	5.5	3.4	
	CA14S-14	14.0	14.0	11.0	8.0	5.0	
ΔPMN	Minimum differential pressure					0.1 bar	
Product is safe for use under full vacuum conditions							
Designed for a maximum cold hydraulic test pressure of:						24 bar g	(348 psi g)

3. Installation

Note: Before actioning any installation observe the 'Safety information' in Section 1.

Warning

The cover gasket and the main valve assembly gasket on the CA14S contains a thin stainless steel support ring which may cause physical injury if not handled and disposed of carefully.

Referring to the Installation and Maintenance Instructions, name-plate and Technical Information Sheet, check that the product is suitable for the intended installation:

3.1 Check materials, pressure and temperature and their maximum values. If the maximum operating limit of the product is lower than that of the system in which it is being fitted, ensure that a safety device is included in the system to prevent overpressurisation.

3.2 Determine the correct installation situation and the direction of fluid flow.

3.3 Remove protective covers from all connections.

3.4 **CA10S, CA14 and CA14S**
(½" and ¾" screwed)
The trap should be fitted in the horizontal plane with the inlet at the top so that the float mechanism is free to rise and fall in a vertical plane. Some typical installations are displayed in Figures 5, 6 and 7.

CA14 and CA14S
(DN15, DN20, DN40 and DN50 flanged)
The trap should be fitted in the horizontal plane so that the float mechanism is free to rise and fall in a vertical plane. In this orientation the flow will be either left-to-right or right-to-left.
Note: Figure 5 (opposite) shows an installation without balance line arrangement.

3.5 The trap must be fitted below what it is draining. Point the arrow on the name-plate downwards. One of the advantages of the float trap for draining air systems is that no air bleed is required for satisfactory operation. However, because the trap has no air bleed it could under some circumstances become air locked.
If the load is low, i.e. mains drainage applications, then the air in the body can be displaced as water passes into it.
However, if the load is high, i.e. after cooler or receiver drainage applications, then the air in the body cannot be displaced through the inlet pipe and a separate balance line is needed. It should be noted that the balance line is piped back to the upstream side.
The need for a balance line to prevent the trap from air locking can only be decided by trial and error.
If in any doubt it is preferable to use the balance line arrangement.

Note: If the trap is to discharge to atmosphere ensure it is to a safe place, the discharging fluid may be at a temperature of 100 °C (212 °F).

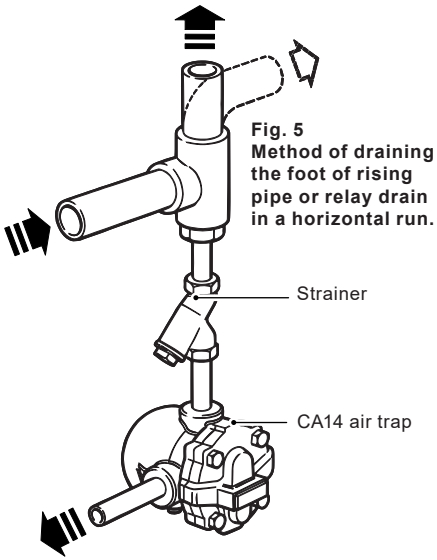

Fig. 5
Method of draining the foot of rising pipe or relay drain in a horizontal run.

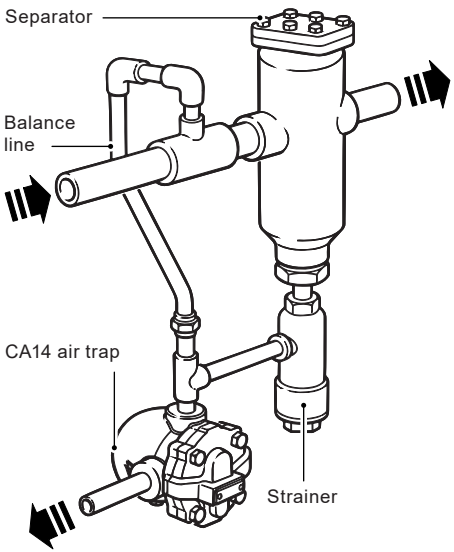

Fig. 6
Air trap draining a separator on a compressed air main

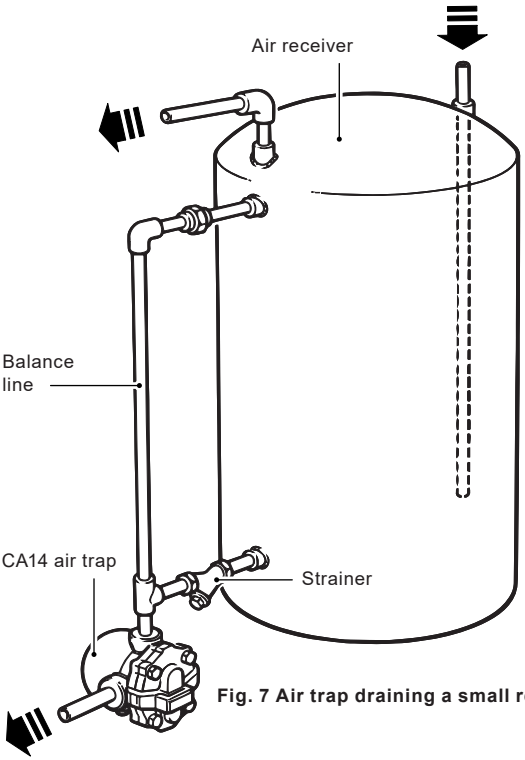

Fig. 7 Air trap draining a small receiver

Figs. 6 and 7
Installations with balance line arrangement

4. Commissioning

After installation or maintenance ensure that the system is fully functional. Carry out tests on any alarms or protective devices.

5. Operation

The CA10 and CA14 float trap is a continuous discharge trap, removing liquid from air and gas systems. As soon as liquid enters the main chamber of the trap, the float rises and the lever mechanism attached to it opens the main valve - keeping the system drained of liquid at all times. When air or gas arrives, the float drops and shuts the main valve tightly against the seat. The balance line is necessary to prevent the trap from becoming air locked. Float type traps are renowned for their instantaneous load handling capability, clean tight shut-off and resistance to waterhammer and vibration.

6. Maintenance and spare parts

6.1 CA10S (¾" screwed)

Note: Before actioning any maintenance program observe the 'Safety information' in Section 1.

Warning

The cover gasket contains a thin stainless steel support ring which may cause physical injury if not handled and disposed of carefully.

Table 1 Recommended tightening torques

Item		or mm		Nm	(lbf ft)
2	**Cover bolt**	17 A/F	M10 x 30	29 - 32	(19 - 23)
5	**Valve seat**	17 A/F	M12 x 8	50 - 55	(37 - 40)
7	**Pivot frame assembly set screws**	Cheesehead	M5 x 20	2.5 - 2.8	(1.8 - 2.1)

Servicing:

- With suitable isolation, repairs can be carried out with the trap in the pipeline.
- When reassembling, make sure that all joint faces are clean and the dowel locates in the cover.

How to fit the main valve assembly:

- Isolate, undo cover bolts (2), remove existing mechanism (5, 6, 7, 8 + 12, 9, 10, 11).
- Using a little jointing paste on the thread and gasket (6), fit the new valve seat to the body (5) and tighten to the recommended torque (see Table 1).
- Attach the support frame (10), and pivot frame (11) to the body with assembly set screws (7), but do not tighten.
- Fit the float arm (8 + 12) to the pivot frame (11) using the pin (9) and by moving the complete assembly centre the valve head onto the seat orifice. Hold the assembly firmly in place and tighten up set screws (7) to the recommended tightening torque (see Table 1).
- Check operation by raising and lowering the float several times making sure that the valve head is centring properly on the seat.
- Make sure all joint faces are clean, apply a thin coating of an anti-seize compound to the cover bolt threads (2).
- Refit the cover (4) using a new cover gasket (3)
- Tighten cover bolts (2) uniformly to the recommended tightening torque (see Table 1). Open up the isolating valve slowly until full system pressure is achieved.
- Check for leaks.

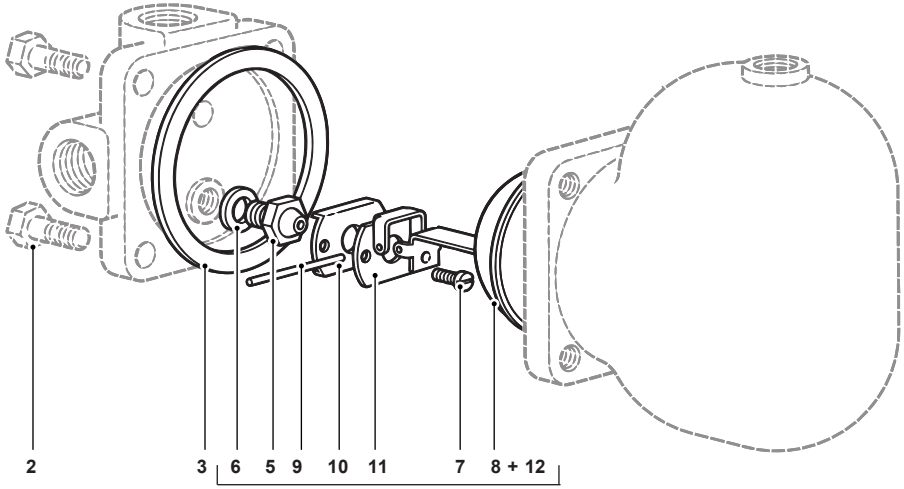

Fig. 8 **Main valve assembly with float**

Spare parts

The spare parts available are shown in heavy outline.
Parts drawn in broken line are not supplied as spares.

Available spares

Main valve assembly with float	**5, 6, 7, 8 +12, 9, 10 and 11**
Gasket set (packet of 3 sets)	**3, 6**

How to order spares

Always order spares by using the description given in the column headed 'Available spares' and state the size and type of trap.
Example: 1 - Main valve assembly for a Spirax Sarco ¾" CA10S air and gas trap.

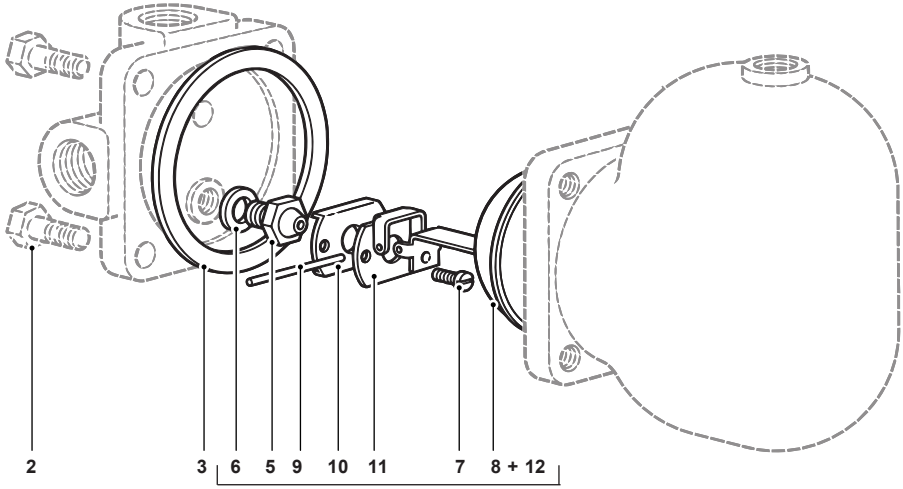

Fig. 9

6.2 CA14 and CA14S (½" and ¾" screwed)

Note: Before actioning any maintenance program observe the 'Safety information' in Section 1.

Warning

The cover gasket contains a thin stainless steel support ring which may cause physical injury if not handled and disposed of carefully.

Servicing:

- With suitable isolation, repairs can be carried out with the trap in the pipeline.
- When reassembling, make sure that all joint faces are clean.

How to fit the main valve CA14:

- Undo the cover bolts (2) and lift off the cover (4), withdraw the pivot pin (11) to release the float and lever (9) from the pivot frame (10).
- Push out the main valve cone (5) and replace with a new one.
- Reassemble and refit the cover (4) using a new gasket (3).
- Tighten cover bolts (2) uniformly to the recommended tightening torque (see Table 2, on the next page). Open up the isolating valve slowly until full system pressure is achieved.
- Check for leaks.

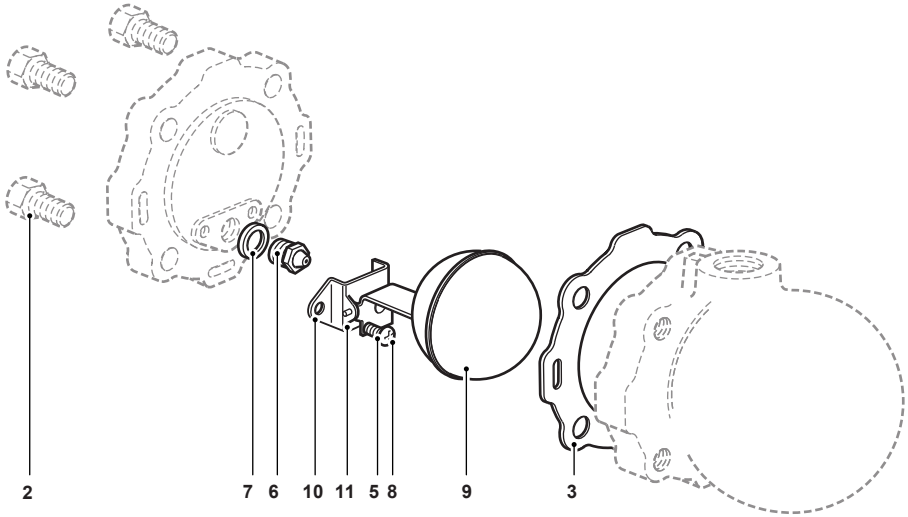

Fig. 10

How to replace the main valve assembly CA14 and CA14S:

- Undo the cover bolts (2) and lift off the cover (4).
- Remove the complete float assembly (9, 10, 11 and 5) by undoing the two screws (8).
- Remove the main valve seat (6) and replace with a new one supplied with new gasket (7).
- Fit a complete new float assembly (9, 10, 11 and 5) by tightening the assembly set screws (8) to the recommended torque (see Table 2).
- Refit the cover using a new gasket (3).
- Tighten cover bolts (2) uniformly to the recommended tightening torque (see Table 2). Open up the isolating valve slowly until full system pressure is achieved.
- Check for leaks.

Table 2 Recommended tightening torques

Item			or mm	Nm	(lbf ft)
2	**Cover bolt**	17 A/F	M10 x 30	47 - 50	(35 - 37)
5	**Valve seat**	17 A/F	M12	50 - 55	(36 - 40)
8	**Pivot frame assembly set screws**	Pozidrive	M4 x 6	2.5 - 3.0	(1.8 - 2.2)

Spare parts

The spare parts available are shown in heavy outline.
Parts drawn in broken lines are not supplied as spares.

Available spares

Maintenance kit	CA14	**3, 5 , 6, 7, 8 (2 off), 9, 10, 11**
	CA14S	**3, 6, 7, 8 (2 off), 9 + 5, 10, 11**
Seal kit	CA14	**3, 5**

How to order spares

Always order spares by using the description given in the column headed 'Available spares' and state the size and type of trap.
Example: 1 - Maintenance kit for a Spirax Sarco ½" CA14 air trap.

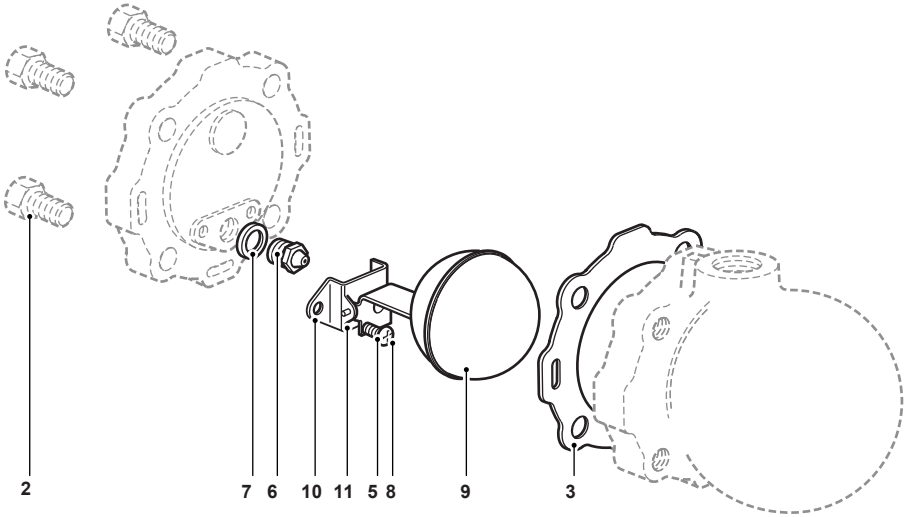

Fig. 11

6.3 CA14 and CA14S (DN15, 20 and 25 flanged)

Note: Before actioning any maintenance program observe the 'Safety information' in Section 1.

Warning

The cover gasket contains a thin stainless steel support ring which may cause physical injury if not handled and disposed of carefully.

Servicing:

- With suitable isolation, repairs can be carried out with the trap in the pipeline.
- When reassembling, make sure that all joint faces are clean.

How to fit the main valve - CA14:

- Undo the cover bolts (2) and lift off the cover (4), withdraw the pivot pin (11) to release the float and lever (9) from the pivot frame (10).
- Push out the main valve cone (5) and replace with a new one.
- Reassemble and refit the cover using a new gasket (3).
- Tighten cover bolts (2) uniformly to the recommended tightening torque (see Table 3). Open up the isolating valve slowly until full system pressure is achieved.
- Check for leaks.

How to fit the main valve assembly - CA14 and CA14S:

- Undo the cover bolts (2) and lift off the cover (4).
- Remove the complete float assembly (5, 9, 10, 11 and 13 DN25 only) by undoing the two screws (8).
- Remove the main valve seat (6) and replace with a new one supplied with new gasket (7).
- Fit complete new float assembly by tightening the assembly set screws (8) to the recommended torque (see Table 3).
- Refit the cover (4) using a new gasket (3).
- Tighten cover bolts (2) uniformly to the recommended tightening torque (see Table 3). Open up the isolating valve slowly until full system pressure is achieved.
- Check for leaks.

Table 3 Recommended tightening torques

Item			or mm	Nm	(lbf ft)
2	**Cover bolt**	17 A/F	M10 x 30	47 - 50	(35 - 37)
6	**Valve seat**	17 A/F	M12 x 12	50 - 55	(36 - 40)
8	**Pivot frame assembly set screws**	Pozidrive	M4 x 6	2.5 - 3.0	(1.8 - 2.2)

Spare parts

The spare parts available are shown in heavy outline.
Parts drawn in broken lines are not supplied as spares.

Available spares

Maintenance kit	CA14S	**3, 6, 7, 8 (2 off), 5 + 9, 10, 11, 13 (DN25 only)**
	CA14	**3, 6, 7, 8 (2 off), 5 + 9, 10, 11**
Seal kit	CA14	**3, 5**

How to order spares

Always order spares by using the description given in the column headed 'Available spares' and state the size and type of trap.
Example: 1 - Maintenance kit for a Spirax Sarco DN15 CA14 air and gas trap.

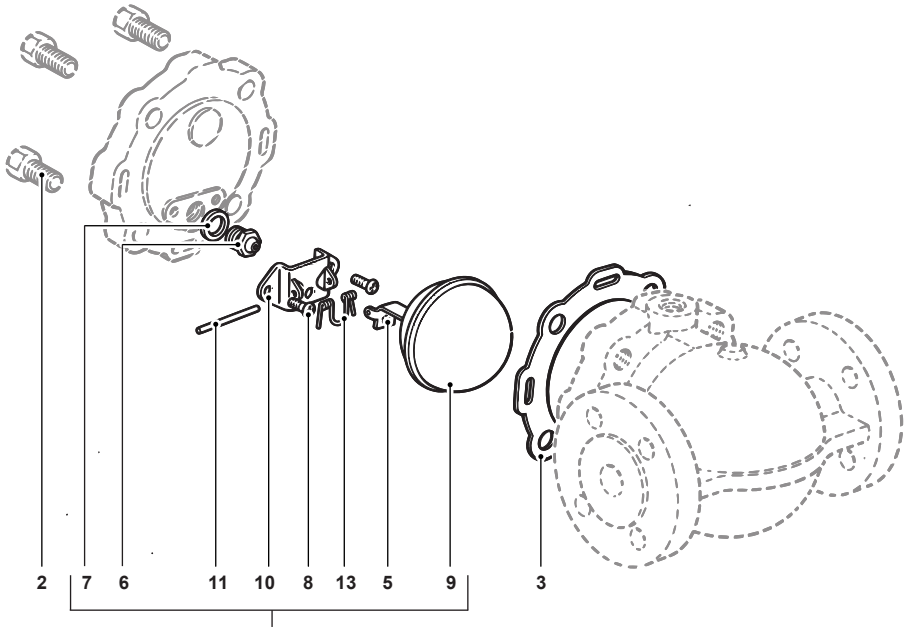

Main valve assembly
Note: Item 13 is required for DN25 size only

Fig. 12

6.4 CA14S (DN40 and 50 flanged)

Note: Before actioning any maintenance program observe the 'Safety information' in Section 1.

Warning

The cover gasket and main valve assembly gasket, contains a thin stainless steel support ring which may cause physical injury if not handled and disposed of carefully.

Servicing:

- With suitable isolation, repairs can be carried out with the trap in the pipeline.
- When reassembling, make sure that all joint faces are clean and the dowel locates in the cover.

How to fit the main valve assembly:

- Undo the cover bolts (2) and lift off the cover.
- Remove the complete float assembly (7, 8, 9, 10 and 11) by undoing the two screws (6).
- Remove the main valve seat (5) and replace with a new one supplied with new gasket (14).
- Tighten to the recommended tightening torques (see Table 4).
- Attach the support frame (9) and pivot frame (10) to the body with the assembly set screws (6), but do not tighten.
- Fit the float arm (7 and 8) to the pivot frame (10) using the pin (11) and by moving the complete assembly centre the valve head onto the seat orifice. Hold the assembly firmly in place and tighten up the set screws (6) to the recommended tightening torque (see Table 4).
- Check operation by raising and lowering the float (7) several times making sure that the valve head is centering properly on the seat (5).
- Make sure that all joint faces are clean and apply a thin coating of an anti-seize compound to the cover bolts (2).
- Tighten cover bolts (2) uniformly to the recommended tightening torque (see Table 4). Open up the isolating valve slowly until full system pressure is achieved.
- Check for leaks.

Table 4 Recommended tightening torques

Item		Size	Qty	or mm		Nm	(lbf ft)
2	Cover studs and nuts	DN40	6	19 A/F	M12	60 - 66	(44 - 48)
		DN50	6	24 A/F	M16	80 - 88	(58 - 65)
5	Valve seat	DN40, DN50	1	17 A/F	M12	50 - 55	(37 - 40)
6	Pivot frame assembly bolts	DN40, DN50	2	Cheesehead	M5 x 20	25 - 28	(18 - 20)
13	Mounting plate fastening bolts	DN40	4	10 A/F	M6	10 - 12	(7 - 9)
		DN50	4	13 A/F	M8	20 - 24	(15 - 17)

Spare parts

The spare parts available are shown in heavy outline.
Parts drawn in broken line are not supplied as spares.

Available spares

Main valve assembly with float*	**5, 6, 7+8, 9, 10, 11, 14**
* The erosion deflector is pressed into the body during manufacture and not available as a spare	
Complete set of gaskets (packet of 3 sets)	**3, 14**

How to order spares

Always order spares by using the description given in the column headed 'Available spares' and state the size and type of trap.
Example: 1 - Main valve assembly with float for a Spirax Sarco DN40 CA14S-14 air and gas trap.

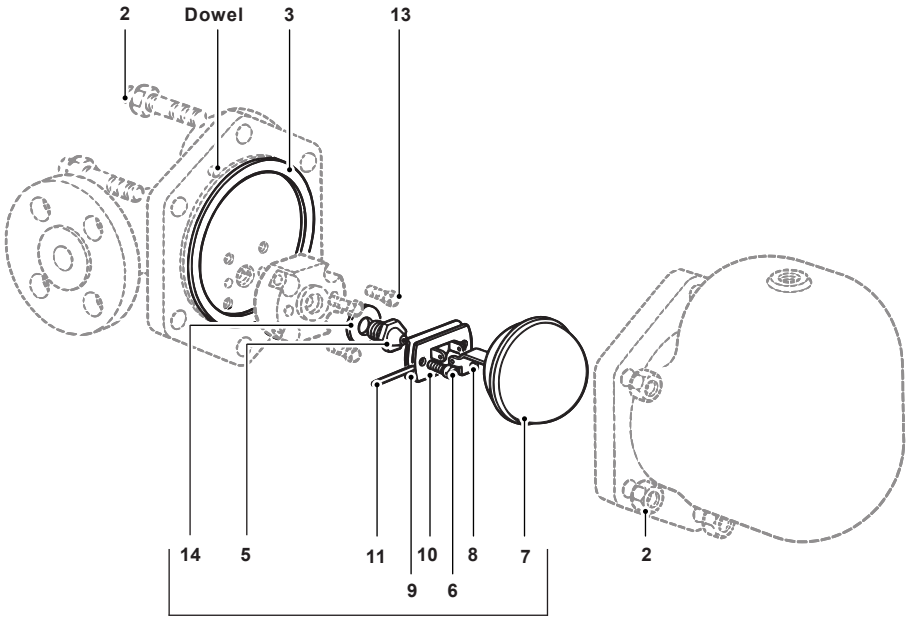

Main valve assembly with float

Fig. 13