# BCV Blowdown Control Valves
# DN15 to DN50 (½" to 2")
Installation and Maintenance Instructions

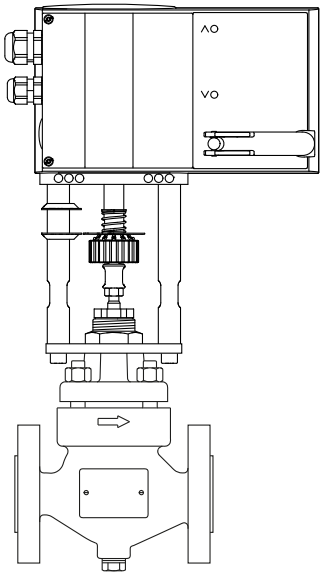

**Electrically actuated**
**BCV boiler blowdown valve**

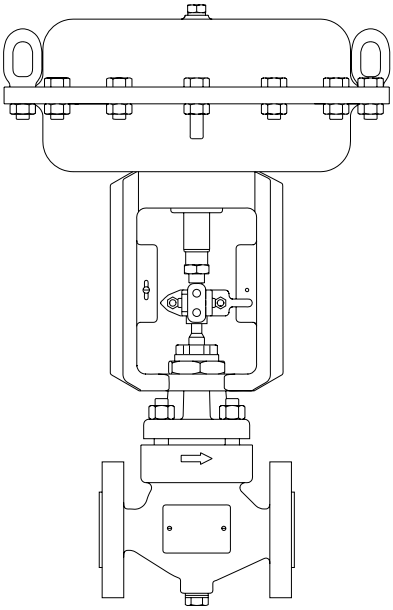

**Pneumatically actuated**
**BCV boiler blowdown valve**



© Copyright 2026
Printed in France

# Contents


| | | |
|---|---|---|
| 1. | Safety information | 4 |
| 2. | General product information and application | 9 |
| 3. | Technical data | 11 |
| 4. | Installation and dimensions | 21 |
| 5. | AEL3 Actuator with spring return | 28 |
| 6. | Flow settings | 32 |
| 7. | Rotating the electrical actuator | 36 |
| 8. | Wiring | 37 |
| 9. | Pneumatic actuator stroke adjustment | 40 |
| 10. | Maintenance | 42 |
| 11. | Spare parts | 48 |

# 1. Safety information

**Safe operation of these products can only be guaranteed if they are properly installed, commissioned, used and maintained by qualified personnel (see Section 1.11 on this document) in compliance with the operating instructions. General installation and safety instructions for pipeline and plant construction, as well as the proper use of tools and safety equipment must also be complied with.**

### WARNING

1. **Your attention is drawn to any National or Regional regulations concerning boiler blowdown. In the UK, guidance is given in Blowdown Systems, Guidance for Industrial Steam Boilers (Ref: BG03).**
2. **When the EL actuator is used it must be electrically isolated before any maintenance is carried out.**

## 1.1 Intended use

**Referring to the Installation and Maintenance Instructions, name-plate and Technical Information Sheet, check that the product is suitable for the intended use/application. The products listed below comply with the requirements of the European Pressure Equipment Directive 2014/68/EU and carry the CE mark when so required.**

**Pressure equipment not bearing the CE mark is classified 'Sound Engineering Practice' in accordance with Article 3, Paragraph 3 of the PED.**

**Note: By law, SEP products cannot be marked with the CE symbol.**

**BCV blowdown control valves fall within the following PED categories:**

| Product | | | Group 1 Gases | Group 2 Gases | Group 1 Liquids | Group 2 Liquids |
|---|---|---|---|---|---|---|
| ALL | ALL | DN15-DN25 | SEP | SEP | SEP | SEP |
| BCV4 | ASME150 | DN32-DN50 | 1 | SEP | SEP | SEP |
| | JIS/KS10 | DN32-DN50 | 1 | SEP | SEP | SEP |
| | JIS/KS20 | DN32 | 2 | SEP | SEP | SEP |
| | JIS/KS20 | DN40-DN50 | 2 | 1 | SEP | SEP |
| | PN40 | DN32 | 2 | SEP | SEP | SEP |
| | PN40 | DN40-DN50 | 2 | 1 | SEP | SEP |
| | ASME300* | DN32 | 2 | SEP | SEP | SEP |
| | ASME300* | DN40-DN50 | 2 | 1 | 2 | SEP |
| BCV6 | ASME150 | DN32-DN50 | 1 | SEP | SEP | SEP |
| | JIS/KS10 | DN32-DN50 | 1 | SEP | SEP | SEP |
| | JIS/KS20 | DN32 | 2 | SEP | SEP | SEP |
| | JIS/KS20 | DN40-DN50 | 2 | 1 | SEP | SEP |
| | PN40** | DN32 | 2 | SEP | SEP | SEP |
| | PN40** | DN40-DN50 | 2 | 1 | SEP | SEP |
| | ASME300* | DN32 | 2 | SEP | SEP | SEP |
| | ASME300* | DN40 | 2 | 1 | SEP | SEP |
| | ASME300* | DN50 | 2 | 1 | 2 | SEP |
| BCV7 | PN25** | DN32-DN40 | 1 | SEP | SEP | SEP |
| | ASME125 | DN32-DN50 | 1 | SEP | SEP | SEP |
| | NPT | DN32 | 2 | SEP | SEP | SEP |
| | NPT | DN40-DN50 | 2 | 1 | SEP | SEP |
| | JIS/KS10 | DN50 | 1 | SEP | SEP | SEP |
| | PN25** | DN50 | 2 | 1 | SEP | SEP |

* Including Screwed NPT and SW
** Incuding Screwed BSP

i) The products have been specifically designed for use with liquids and gases which are in Group 2 of the above mentioned Pressure Equipment Directive. The products' use on other fluids may be possible but, if this is contemplated, Spirax Sarco should be contacted to confirm the suitability of the product for the application being considered.
For applications involving fluids other than steam, water and condensate, the suitability of materials in contact with the process fluid shall be verified in accordance with the latest approved Material and Chemical Compatibility Assessment Chart. PED fluid classification (Group 1/Group 2) shall not be considered as evidence of material compatibility.

ii) Determine the correct installation situation and direction of fluid flow.

iii) Spirax Sarco products are not intended to withstand external stresses that may be induced by any system to which they are fitted. It is the responsibility of the installer to consider these stresses and take adequate precautions to minimise them.

iv) Remove protection covers from all connections and protective film from all name-plates, where appropriate, before installation on steam or other high temperature applications.

v) Prior to use, the user shall ensure the fluid compatibility with the equipment material.

## 1.2 Access
Ensure safe access and if necessary a safe working platform (suitably guarded) before attempting to work on the product. Arrange suitable lifting gear if required.

## 1.3 Lighting
Ensure adequate lighting, particularly where detailed or intricate work is required.

## 1.4 Hazardous liquids or gases in the pipeline
Consider what is in the pipeline or what may have been in the pipeline at some previous time. Consider: flammable materials, substances hazardous to health, extremes of temperature.

## 1.5 Hazardous environment around the product
Consider: explosion risk areas, lack of oxygen (e.g. tanks, pits), dangerous gases, extremes of temperature, hot surfaces, fire hazard (e.g. during welding), excessive noise, moving machinery.

## 1.6 The system
Consider the effect on the complete system of the work proposed. Will any proposed action (e.g. closing isolation valves, electrical isolation) put any other part of the system or any personnel at risk? Dangers might include isolation of vents or protective devices or the rendering ineffective of controls or alarms. Ensure isolation valves are turned on and off in a gradual way to avoid system shocks.

## 1.7 Pressure systems
Ensure that any pressure is isolated and safely vented to atmospheric pressure. Consider double isolation (double block and bleed) and the locking or labelling of closed valves. Do not assume that the system has depressurised even when the pressure gauge indicates zero.

## 1.8 Temperature
**Allow time for temperature to normalise after isolation to avoid danger of burns.**

## 1.9 Tools and consumables
**Before starting work ensure that you have suitable tools and/or consumables available. Use only genuine Spirax Sarco replacement parts.**

## 1.10 Protective clothing
**Consider whether you and/or others in the vicinity require any protective clothing to protect against the hazards of, for example, chemicals, high/low temperature, radiation, noise, falling objects, and dangers to eyes and face.**

## 1.11 Permits to work
**All work must be carried out or be supervised by a suitably competent person. Installation and operating personnel should be trained in the correct use of the product according to the Installation and Maintenance Instructions. Where a formal 'permit to work' system is in force it must be complied with. Where there is no such system, it is recommended that a responsible person should know what work is going on and, where necessary, arrange to have an assistant whose primary responsibility is safety. Post 'warning notices' if necessary.**

## 1.12 Handling
**Manual handling of large and/or heavy products may present a risk of injury. Lifting, pushing, pulling, carrying or supporting a load by bodily force can cause injury particularly to the back. You are advised to assess the risks taking into account the task, the individual, the load and the working environment and use the appropriate handling method depending on the circumstances of the work being done.**

## 1.13 Residual hazards
**In normal use the external surface of the product may be very hot. If used at the maximum permitted operating conditions the surface temperature of some products may reach temperatures of 580 °C (1076 °F). Many products are not self-draining. Take due care when dismantling or removing the product from an installation (refer to 'Maintenance instructions').**

## 1.14 Freezing
**Provision must be made to protect products which are not self-draining against frost damage in environments where they may be exposed to temperatures below freezing point.**

## 1.15 Disposal

**Unless otherwise stated in the Installation and Maintenance Instructions, this product is recyclable and no ecological hazard is anticipated with its disposal providing due care is taken.**

**Please visit the Spirax Sarco product compliance web pages**
**https://www.spiraxsarco.com/product-compliance**
**for up to date information on any substances of concern that may be contained within this product. Where no additional information is provided on the Spirax Sarco product compliance web page, this product may be safely recycled and/or disposed providing due care is taken. Always check your local recycling and disposal regulations.**

## 1.16 Returning products

**Customers and stockists are reminded that under EC Health, Safety and Environment Law, when returning products to Spirax Sarco they must provide information on any hazards and the precautions to be taken due to contamination residues or mechanical damage which may present a health, safety or environmental risk. This information must be provided in writing including Health and Safety data sheets relating to any substances identified as hazardous or potentially hazardous.**

## 1.17 CE conformity of actuators

| | |
|---|---|
| **Electrical actuator:** | **This actuator is CE marked. It complies with LV Directive 2014/35/EU. EN60730-1, EN60730-2-14.**<br>**This actuator complies with EMC Directive 2014/30/EU, EN61000-6-2, EN6100-6-4** |
| **Pneumatic actuator:** | **See the Technical Information for the PN9000 series** |

# 2. General product information and application

## 2.1 Description

Spirax Sarco's BCV blowdown control valves are manufactured using the market proven Spira-trol™ body. These valves are designed for the blowdown of steam boilers or for other high pressure drop, low flow applications, and are generally used with a blowdown controller as part of an automatic BCV control system. The valve may also be used for other high pressure drop, low flowrate applications such as boiler feedpump recirculation.

Two versions are available:

- Electrically actuated
- Pneumatically actuated

### Standards

These products fully comply with the requirements of the European Pressure Equipment Directive 2014/68/EU.

### Certification

These products are available with material certification to EN 10204 3.1.
**Note**: All certification/inspection requirements must be stated at the time of order placement.

### Note:

For additional product information see Technical Information sheet TI-P403-102.

## 2.2 Size and pipe connections

½", ¾", 1", 1¼", 1½" and 2"
Screwed BSP T Rp (ISO 7-1) or NPT,
Socket weld.

DN15, DN20, DN25, DN32, DN40 and DN50 Flanged:
EN 1092 PN25 and PN40
ASME class 125, 150, 250 and 300
JIS/KS 10K and 20K

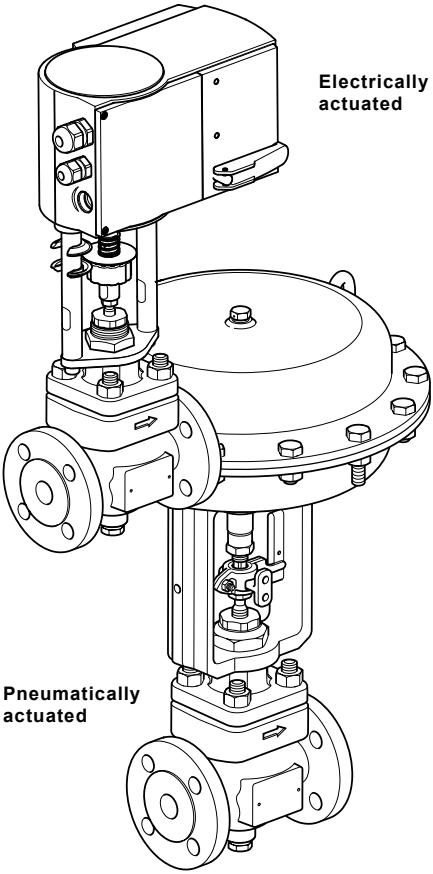


**Fig. 1 BCV blowdown control valves**

## 2.3 Available models:

| Material | Connections | | |
|---|---|---|---|
| | Screwed | Socket weld | Flanged |
| Carbon steel | **BCV41** | **BCV42** | **BCV43** |
| Stainless steel | **BCV61** | **BCV62** | **BCV63** |
| SG iron | **BCV71** | | **BCV73** |

**BCV blowdown control valves are compatible with the following actuators:**

| Version | Actuator |
|---|---|
| **Electric** | AEL3 series |
| **Pneumatic** | PN9_ _ _ series |

# 3. Technical data

| | |
|---|---|
| **Media** | Water |

## 3.1 Actuator technical data

| | |
|---|---|
| **Actuator** | **AEL3 Series** |
| **Supply voltage** | Standard 24 Vac/dc, Optional card 230 Vac and 100 Vac |
| **Supply frequency** | 50 to 60 Hz |
| **Power consumption** | 12W (24 Vac/dc)<br>28W (230 Vac, 110 Vac) |
| **Actuator speed** | 0.5 mm/s (2 s/mm)- 0.25 mm/s (4 s/mm) - 0.16 mm/s (6 s/mm) |
| **Actuators thrust maximum** | 2 kN |

| **Size** | | **Actuator** | **Maximum shut-off value** |
|---|---|---|---|
| **DN15 to DN25** | **½" to 1"** | AEL3 series/PN9123E | 51.1 bar g @100 °C |
| **DN32 to DN50** | **1¼" to 2"** | AEL3 series/PN9223E | |

| | | | |
|---|---|---|---|
| **Maximum ambient temperature** | 24 volt version (Connect to class 2 circuit only) | -10 °C to +55 °C | (-4 °F to 131 °F) |
| | 110/230 volt versions | -10 °C to +50 °C | (-4 °F to 122 °F) |

## 3.2 Pressure/temperature limits

| | | **See Section** |
|---|---|---|
| **BCV41** | Screwed | **3.3** |
| **BCV43** | Flanged EN 1092 | |
| **BCV41** | Screwed | **3.4** |
| **BCV42** | Socket weld | |
| **BCV43** | Flanged ASME | |
| **BCV43** | Flanged JIS/KS | **3.5** |
| **BCV61** | Screwed | **3.6** |
| **BCV63** | Flanged EN 1092 | |

| | | **See Section** |
|---|---|---|
| **BCV61** | Screwed | **3.7** |
| **BCV62** | Socket weld | |
| **BCV63** | Flanged ASME | |
| **BCV63** | Flanged JIS/KS | **3.8** |
| **BCV71** | Screwed | **3.9** |
| **BCV73** | Flanged EN 1092 | |
| **BCV71** | Screwed | **3.10** |
| **BCV73** | Flanged ASME | |
| **BCV73** | Flanged JIS/KS | **3.11** |

## 3.3 BCV4_ Pressure/temperature limits

**BCV41 - Screwed BSP T Rp (ISO 7-1)**

**BCV43 - Flanged EN 1092**

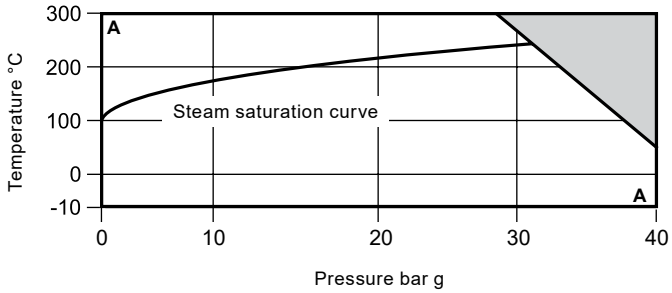


The product **must not** be used in this region.

**A - A** Flanged EN 1092 PN40 and Screwed BSP T Rp (ISO 7-1)

| Body design conditions | | PN40<br>JIS/KS 20K |
|---|---|---|
| PMA | Maximum allowable pressure | 40 bar g @ 50 °C |
| TMA | Maximum allowable temperature | 300 °C @ 27.6 bar g |
| Minimum allowable temperature | | -10 °C |
| PMO | Maximum operating pressure for saturated steam service | 31.1 bar g @ 237 °C |
| TMO | Maximum operating temperature | 300 °C @ 27.6 bar g |
| Minimum operating temperature | | -10 °C |

Designed for a maximum cold hydraulic test pressure of: 1.5 x PMA of the relative end connection of choice

## 3.4 BCV4_ Pressure/temperature limits

**BCV41 - Screwed NPT**

**BCV42 - Socket weld**

**BCV43 - Flanged ASME**

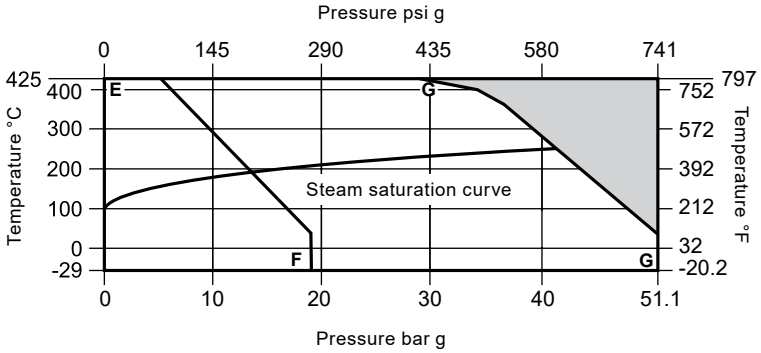


The product **must not** be used in this region.

**E - F** Flanged ASME class 150

**E - G** Flanged ASME class 300, Screwed NPT and Socket weld class 3000 (B 16.11)

| Body design conditions | | | | ASME class 150, class 300 |
|---|---|---|---|---|
| PMA | Maximum allowable pressure | ASME 150 | 40 bar g @ 50 °C | 284 psi g @ 100 °F |
| | | ASME 300 | 63 bar g @ 50 °C | 741 psi g @ 100 °F |
| TMA | Maximum allowable temperature | ASME 150 | 300 °C @ 27.6 bar g | 797 °F @ 80 psi g |
| | | ASME 300 | 400 °C @ 37.5 bar g | 797 °F @ 418 psi g |
| Minimum allowable temperature | | ASME 150 | -10 °C | -20 °F |
| | | ASME 300 | -29 °C | -20 °F |
| PMO | Maximum operating pressure for saturated steam service | ASME 150 | 31.1 bar g @ 237 °C | 201 psi g @ 386 °F |
| | | ASME 300 | 47.0 bar g @ 261 °C | 605 psi g @ 489 °F |
| TMO | Maximum operating temperature | ASME 150 | 300 °C @ 27.6 bar g | 797 °F @ 80 psi g |
| | | ASME 300 | 400 °C @ 37.5 bar g | 797 °F @ 418 psi g |
| Minimum operating temperature | | ASME 150 | -29 °C | -20 °F |
| | | ASME 300 | | |

Designed for a maximum cold hydraulic test pressure of: 1.5 x PMA of the relative end connection of choice

## 3.5 BCV4_ Pressure/temperature limits

**BCV43 - Flanged JIS/KS**

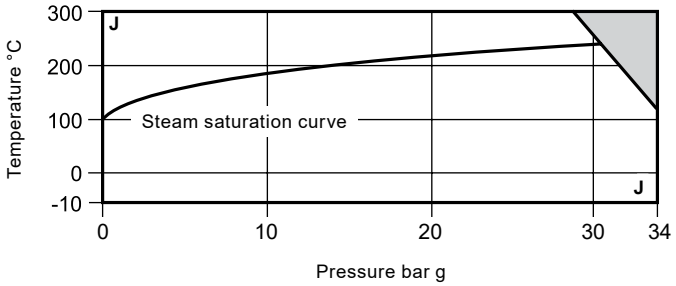


The product **must not** be used in this region.

**J - J** Flanged JIS/KS 20K

| Body design conditions | | JIS/KS 20K |
|---|---|---|
| PMA | Maximum allowable pressure | 34 bar g @ 120 °C |
| TMA | Maximum allowable temperature | 300 °C @ 20 bar g |
| Minimum allowable temperature | | -10 °C |
| PMO | Maximum operating pressure for saturated steam service | 30.6 bar g @ 236 °C |
| TMO | Maximum operating temperature | 300 °C @ 20 bar g |
| Minimum operating temperature | | -10 °C |

Designed for a maximum cold hydraulic test pressure of: 1.5 x PMA of the relative end connection of choice

## 3.6 BCV6_ Pressure/temperature limits

**BCV61 - Screwed BSP T Rp (ISO 7-1)**

**BCV63 - Flanged EN 1092**

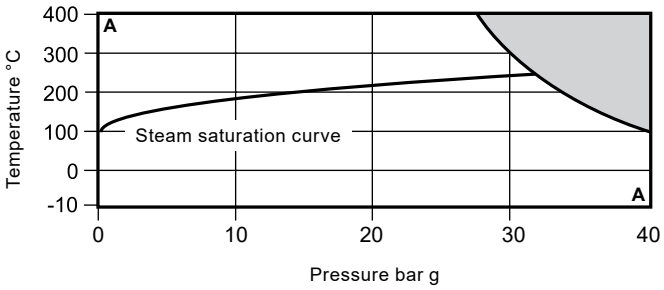


The product **must not** be used in this region.

**A - A** Flanged EN 1092 PN40 and Screwed BSP T Rp (ISO 7-1)

| | | |
|---|---|---|
| Body design conditions | | PN40 |
| PMA | Maximum allowable pressure | 40 bar g @ 100 °C |
| TMA | Maximum allowable temperature | 400 °C @ 27.4 bar g |
| Minimum allowable temperature | | -10 °C |
| PMO | Maximum operating pressure for saturated steam service | 32.2 bar g @ 240 °C |
| TMO | Maximum operating temperature | 400 °C @ 27.4 bar g |
| Minimum operating temperature | | -10 °C |

Designed for a maximum cold hydraulic test pressure of: 1.5 x PMA of the relative end connection of choice

## 3.7 BCV6_ Pressure/temperature limits

**BCV61 - Screwed NPT**

**BCV62 - Socket weld**

**BCV63 - Flanged ASME**

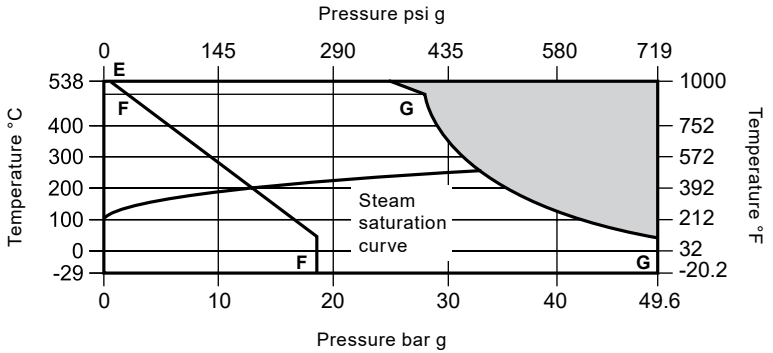


The product **must not** be used in this region.

**E - F** Flanged ASME class 150

**E - G** Flanged ASME class 300, Screwed NPT and Socket weld class 3000 (B 16.11)

| Body design conditions | | | | ASME class 150, class 300 |
|---|---|---|---|---|
| PMA | Maximum allowable pressure | ASME 150 | 19.0 bar g @ 38 °C | 275 psi g @ 100 °F |
| | | ASME 300 | 49.6 bar g @ 38 °C | 719 psi g @ 100 °F |
| TMA | Maximum allowable temperature | ASME 150 | 538 °C @ 1.4 bar g | 1 000 °F @ 20 psi g |
| | | ASME 300 | 538 °C @ 25.2 bar g | 1 000 °F @ 365 psi g |
| Minimum allowable temperature | | ASME 150 | -29 °C | -20 °F |
| | | ASME 300 | -29 °C | -20 °F |
| PMO | Maximum operating pressure for saturated steam service | ASME 150 | 13.8 bar g @ 197 °C | 200 psi g @ 386 °F |
| | | ASME 300 | 33.8 bar g @ 242 °C | 490 psi g @ 467 °F |
| TMO | Maximum operating temperature | ASME 150 | 538 °C @ 1.4 bar g | 1 000 °F @ 20 psi g |
| | | ASME 300 | 538 °C @ 25.2 bar g | 1 000 °F @ 365 psi g |
| Minimum operating temperature | | ASME 150 | -29 °C | -20 °F |
| | | ASME 300 | -29 °C | -20 °F |

Designed for a maximum cold hydraulic test pressure of: 1.5 x PMA of the relative end connection of choice

## 3.8 BCV6_ Pressure/temperature limits

**BCV63 - Flanged JIS/KS**

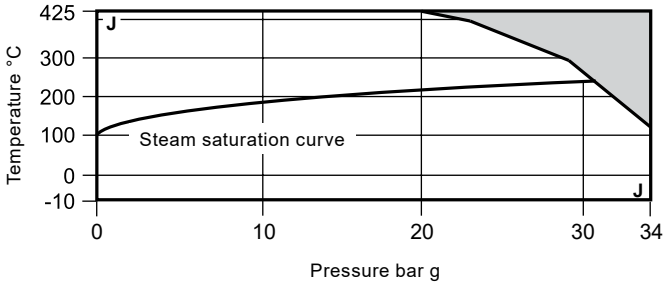


The product **must not** be used in this region.

**J - J** Flanged JIS/KS 20K

| Body design conditions | | JIS/KS 20K |
|---|---|---|
| PMA | Maximum allowable pressure | 34 bar g @ 120 °C |
| TMA | Maximum allowable temperature | 425 °C @ 20 bar g |
| Minimum allowable temperature | | -10 °C |
| PMO | Maximum operating pressure for saturated steam service | 30.6 bar g @ 236 °C |
| TMO | Maximum operating temperature | 425 °C @ 20 bar g |
| Minimum operating temperature | | -10 °C |

Designed for a maximum cold hydraulic test pressure of: 1.5 x PMA of the relative end connection of choice

## 3.9 BCV7_ Pressure/temperature limits

**BCV71 - Screwed BSP T Rp (ISO 7-1)**

**BCV73 - Flanged EN 1092**

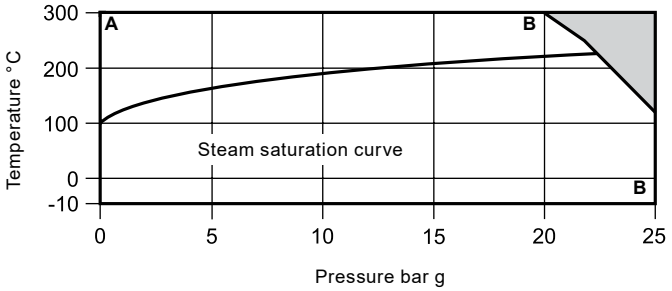


The product **must not** be used in this region.

**A - B** Flanged EN 1092 PN25 and Screwed BSP T Rp (ISO 7-1)

| | | |
|---|---|---|
| Body design conditions | | PN25 |
| PMA | Maximum allowable pressure | 25.0 bar g @ 120 °C |
| TMA | Maximum allowable temperature | 300 °C @ 20 bar g |
| Minimum allowable temperature | | -10 °C |
| PMO | Maximum operating pressure for saturated steam service | 22.5 bar g @ 220 °C |
| TMO | Maximum operating temperature | 300 °C @ 20.0 bar g |
| Minimum operating temperature | | -10 °C |

Designed for a maximum cold hydraulic test pressure of: 1.5 x PMA of the relative end connection of choice

## 3.10 BCV7_ Pressure/temperature limits

**BCV71 - Screwed NPT**

**BCV73 - Flanged ASME**

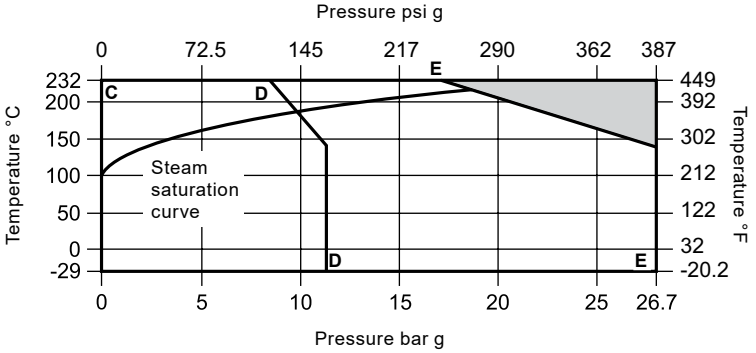


The product **must not** be used in this region.

**C - D** Flanged ASME class 125

**C - E** Flanged ASME class 250 and Screwed NPT

| Body design conditions | | | | ASME class 125 or ASME class 250 |
|---|---|---|---|---|
| PMA | Maximum allowable pressure | ASME 125 | 11.5 bar g @ 140 °C | 166 psi g @ 284 °F |
| | | ASME 250 | 26.7 bar g @ 140 °C | 387 psi g @ 284 °F |
| TMA | Maximum allowable temperature | ASME 125 | 232 °C @ 8.6 bar g | 449 °F @ 125 psi g |
| | | ASME 250 | 232 °C @ 17.2 bar g | 449 °F @ 249 psi g |
| Minimum allowable temperature | | ASME 125 | -29 °C | -20 °F |
| | | ASME 250 | -29 °C | -20 °F |
| PMO | Maximum operating pressure for saturated steam service | ASME 125 | 10.0 bar g @ 184 °C | 145 psi g @ 363 °F |
| | | ASME 250 | 18.0 bar g @ 209 °C | 261 psi g @ 408 °F |
| TMO | Maximum operating temperature | ASME 125 | 232 °C @ 8.6 bar g | 449 °F @ 125 psi g |
| | | ASME 250 | 232 °C @ 17.2 bar g | 449 °F @ 249 psi g |
| Minimum operating temperature | | ASME 125 | -29 °C | -20 °F |
| | | ASME 250 | -29 °C | -20 °F |

Designed for a maximum cold hydraulic test pressure of: 1.5 x PMA of the relative end connection of choice

## 3.11 BCV7_ Pressure/temperature limits

**BCV73 - Flanged JIS/KS**

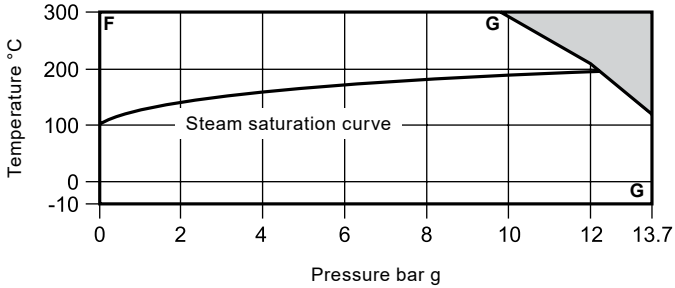


The product **must not** be used in this region.

**F - G** Flanged JIS/KS 10K

| Body design conditions | | JIS/KS 10K |
|---|---|---|
| PMA | Maximum allowable pressure | 13.7 bar g @ 120 °C |
| TMA | Maximum allowable temperature | 300 °C @ 9.8 bar g |
| Minimum allowable temperature | | -10 °C |
| PMO | Maximum operating pressure for saturated steam service | 12.3 bar g @ 191 °C |
| TMO | Maximum operating temperature | 300 °C @ 9.8 bar g |
| Minimum operating temperature | | -10 °C |

Designed for a maximum cold hydraulic test pressure of: 1.5 x PMA of the relative end connection of choice

# 4. Installation and dimensions

**Note:** Before actioning any installation observe the 'Safety information' in Section 1.
For unit sizes see Figures 5 and 6.

The actuator should be protected from excessive heat.
Actuator sealing is to IP54. Additional protection is recommended for outdoor installation.
The valve may be installed in horizontal or vertical lines with flow in the direction of the arrow.
Do not install with the actuator below the valve. For boiler blowdown applications the ideal take-off point for the blowdown is from a boiler side connection (see Figures 2 and 3), to reduce the possibility of scale entering the blowdown valve. If the bottom connection has to be used, make a 'T' connection upstream of the main bottom blowdown valve as shown in Figure 4.
We recommend that where possible the 'T' is taken off the top of the blowdown line to reduce any problems of scale.
The ¼" BSP plug may be removed and the connection used for boiler water sampling. A sample cooler is recommended.
Fit a stop valve between the boiler and the BCV blowdown control valve. A check valve is recommended downstream of the BCV. **For single boiler installations** the blowdown may discharge into the main blowdown line downstream of the main blowdown valve. In the UK, regulations for multi-boiler installations require the automatic blowdown lines to be separate from the main blowdown lines. For further information see Blowdown Systems, Guidance for Industrial Steam Boilers (Ref: BG03).

**Note:** When installing with an S11 chamber, use M12 bolts for PN16, PN25, PN40 and ASME 300 flanged connections.

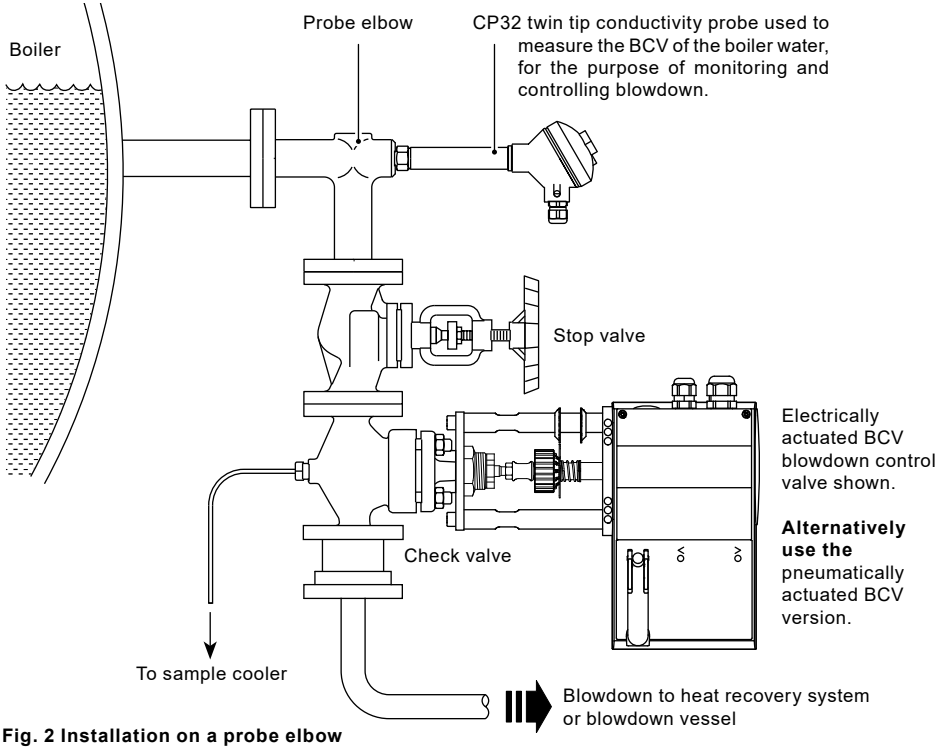


**Fig. 2 Installation on a probe elbow**

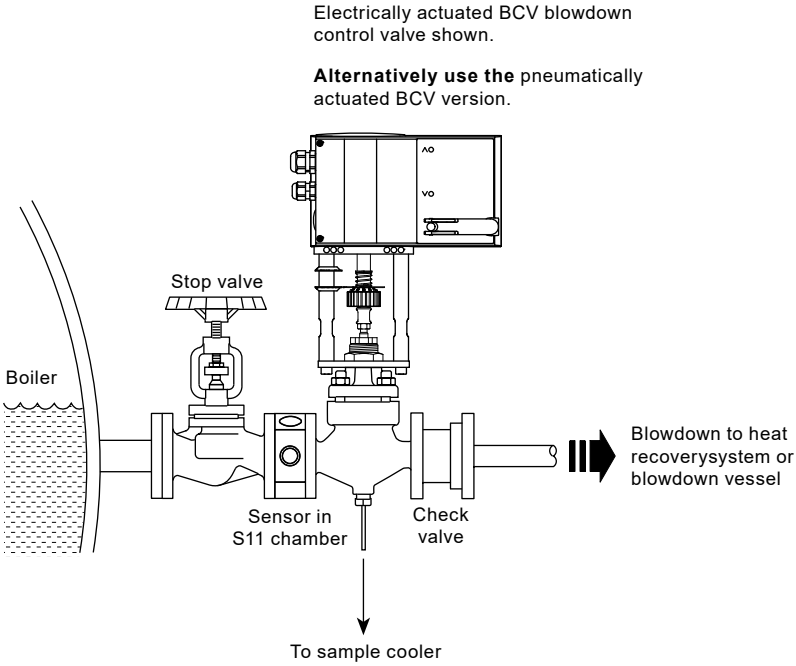


**Fig. 3 Installation on a boiler side connection**

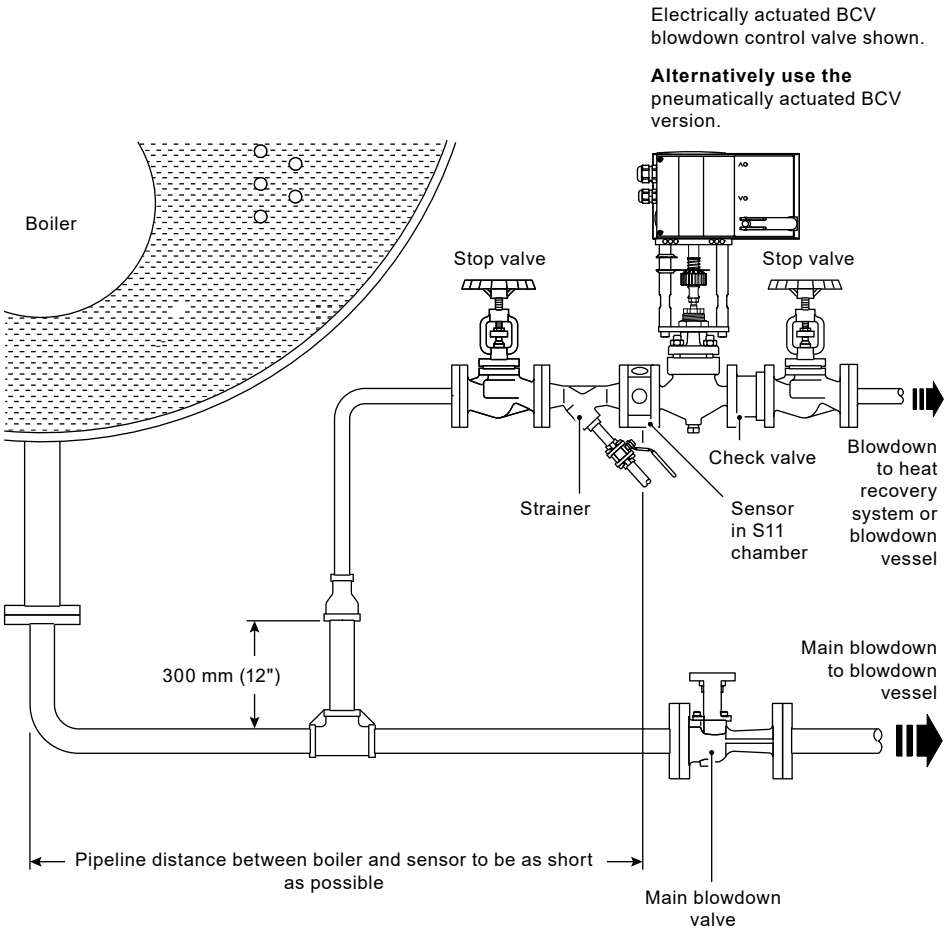


**Fig. 4 Installation on a boiler with no suitable side connection**

## Electric actuation - Dimensions/weights (approximate) in mm (inches) and kg (lbs)

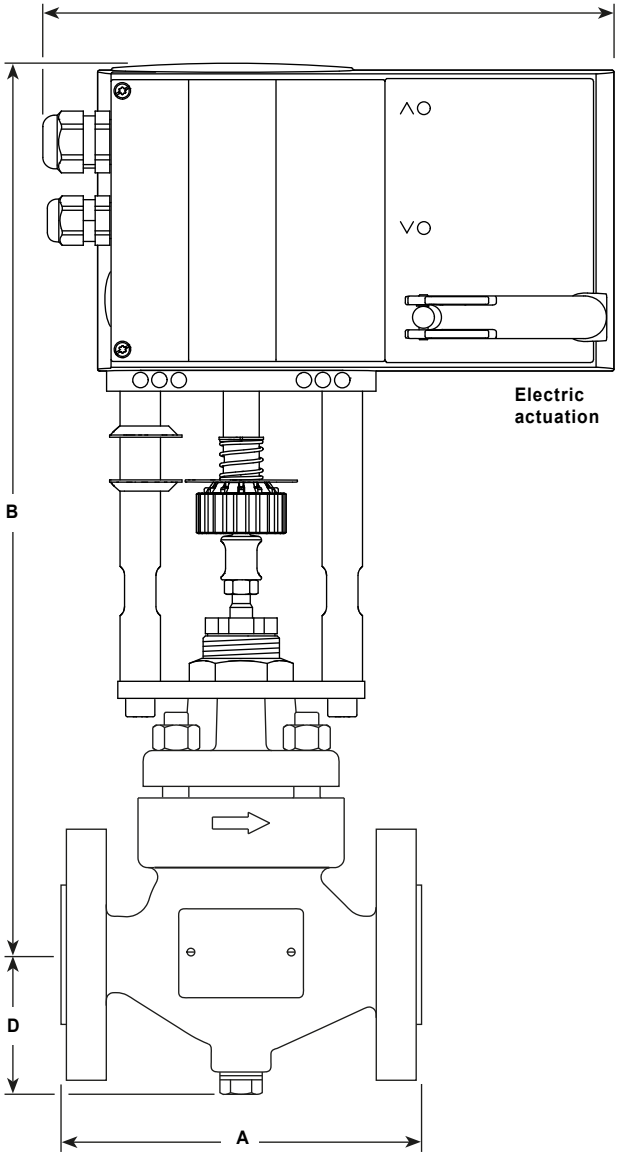


Fig. 5

| Size | A | | | B | C | D | Weight |
|---|---|---|---|---|---|---|---|
| | ASME 125 | ASME 300 | PN40 | ASME 125<br>ASME 300<br>PN40 | | ASME 125<br>ASME 300<br>PN40 | ASME 125<br>ASME 300<br>PN40 |
| **DN15** | | 190.5<br>(7.5) | 130<br>(5.12) | 392<br>(15.43) | 230<br>(9.06) | 42.5<br>(1.67) | 12<br>(26.5) |
| **DN20** | | 190.5<br>(7.5) | 150<br>(5.91) | 392<br>(15.43) | 230<br>(9.06) | 57.0<br>(2.24) | 12.8<br>(28.2) |
| **DN25** | 184<br>(7.24) | 197<br>(7.76) | 160<br>(6.3) | 392<br>(15.43) | 230<br>(9.06) | 54.5<br>(2.15) | 13<br>(28.7) |
| **DN32** | | | 180<br>(7.09) | 421<br>(16.57) | 230<br>(9.06) | 65.5<br>(2.58) | 19.5<br>(43) |
| **DN40** | 222<br>(8.74) | 235<br>(9.25) | 200<br>(7.87) | 421<br>(16.57) | 230<br>(9.06) | 76.5<br>(3.01) | 20<br>(44.1) |
| **DN50** | 254<br>(10) | 267<br>(10.51) | 230<br>(9.06) | 416<br>(16.38) | 230<br>(9.06) | 84.5<br>(3.33) | 23<br>(50.7) |

## Pneumatic actuation - Dimensions/weights (approximate) in mm (inches) and kg (lbs)

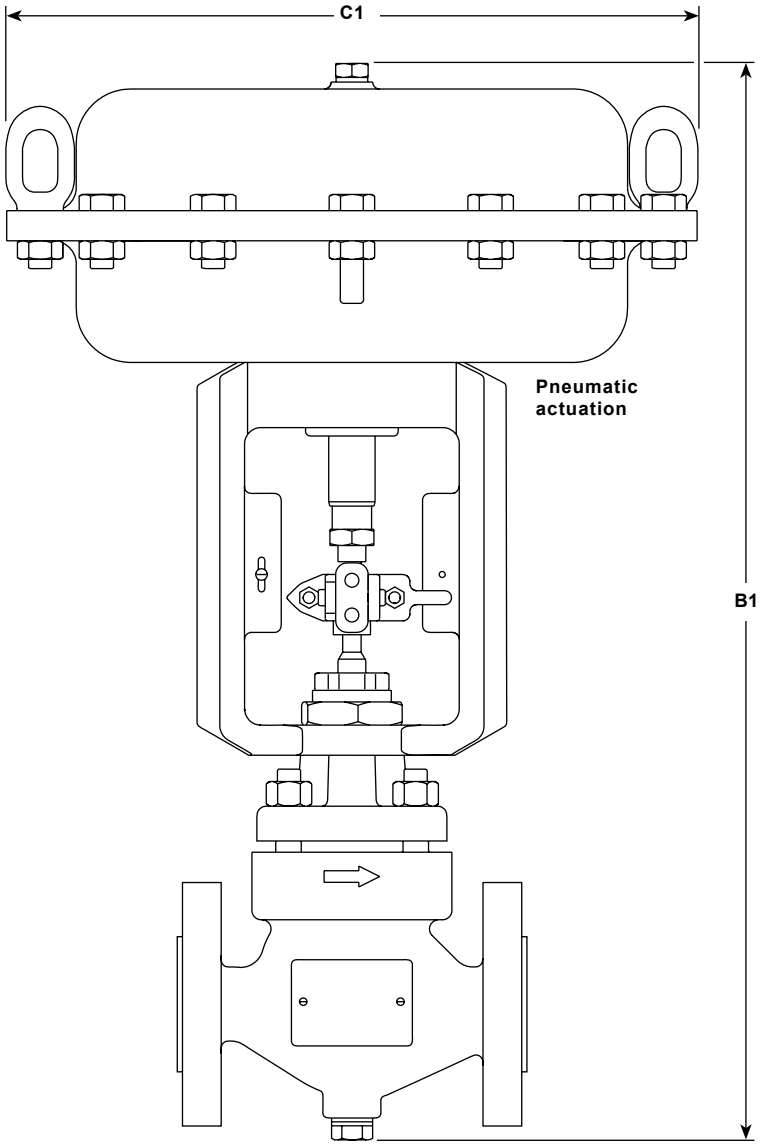


Fig. 6

| Size | B1 | C1 | Weight |
|---|---|---|---|
| | ASME 125/ASME 300/PN40 | | ASME 125/ASME 300/PN40 |
| DN15 | 378<br>(14.88) | 170<br>(6.69) | 12<br>(26.5) |
| DN20 | 378<br>(14.88) | 170<br>(6.69) | 12.8<br>(28.2) |
| DN25 | 378<br>(14.88) | 170<br>(6.69) | 13<br>(28.7) |
| DN32 | 432<br>(17.01) | 300<br>(11.81) | 30.5<br>(67.2) |
| DN40 | 432<br>(17.01) | 300<br>(11.81) | 31<br>(68.3) |
| DN50 | 427<br>(16.81) | 300<br>(11.81) | 34<br>(75) |

# 5. AEL Actuator with spring return

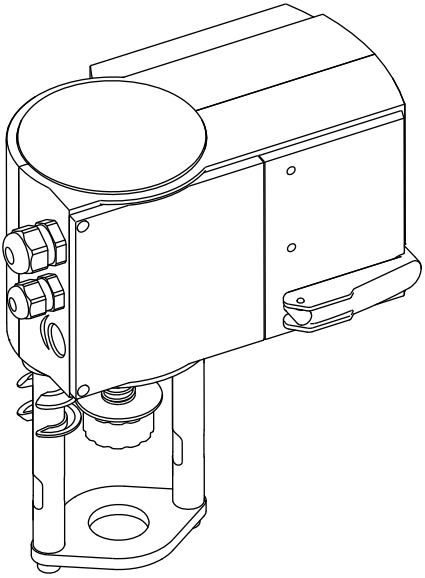

**Fig. 7**
**AEL3 actuator**

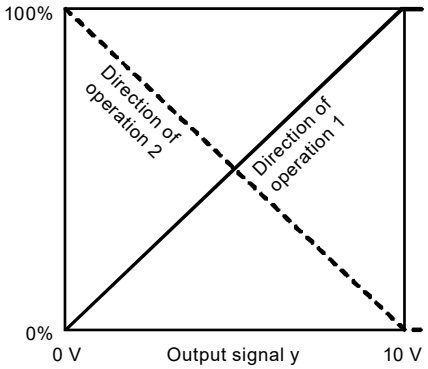


**Fig. 8**

| Type | Running time | | Pushing Force | Stroke | Weight |
|---|---|---|---|---|---|
| | Motor s/mm | Spring s | N | mm | kg |
| **AEL3 Series** | 2/4/6 | 15...30 | 2000 | 0...40 | 5.7<br>4.2 (without spring) |
| **Voltage supply with accessories** | | 24 V | ± 20%, 50...60 Hz | | |
| | | 110 V | ± 15% | | |
| | | 230 V | ± 15% | | |
| **Power consumption** | | 12 W | 28 VA | | |
| **Stroke** | | 20 mm | | | |
| **Duty cycle spring return** | | > 40.000 | | | |
| **Response time for 3-point** | | 200 ms | | | |
| **Maximum temperature of medium** | | 130 °C | | | |
| **Permitted ambient temperature** | | -10...55(60) °C | | | |
| **Permitted ambient humidity** | | < 95% rh without condensation | | | |
| **Degree of protection** | | IP54 (EN 60529) | | | |
| **Protection class** | | III (IEC 60730) | | | |
| **Switches** | | Switching capacity | Maximum 250 V | | |
| | | | Minimum current 250 mA at 12 V | | |

## Operation

After a new start, or after a start following activation of the reset (terminal 21), up to 45 seconds of waiting time will pass before the drive is available again.

The run time of the drive can be set according to the specific requirements, using switches S1 and S2.

The external hand crank allows you to adjust the position manually. When the hand crank is folded out, the motor is switched off. After the hand crank is folded back, the spring function is active again and the setpoint position is adopted again (without initialisation). If the hand crank is unfolded, the drive stays in this position.

## Initialisation and feedback signal

The drive initialises itself automatically, the drive moves to the lower limit stop on the valve, thus enabling automatic connection with the valve spindle. Then it moves to the upper limit stop, and the value is recorded and saved with the help of a path measurement system. To trigger an initialisation, fold the hand crank out and back in again twice within 4 seconds. Both the LEDs will then flash red.

## Spring return

If the voltage supply fails or is switched off, or if a monitoring contact (terminal 21) responds, the brushless dc motor releases the gear and the drive is moved into the respective end position (de-pending on the design version) by the pre-tensioned spring. As this happens, the control function of the drive is disabled for 45 seconds (both LEDs flash green) so that the end position can be reached in every case. The reset speed is controlled with the help of the motor so that there are no pressure surges in the line. The brushless dc motor has three functions: as a magnet to hold the position, as a brake (by acting as a generator) and as a motor for the control function. After a spring return function, the drive does not re-initialise itself.

## LED display

The display consists of two dual-colour LEDs (red/green):

| | |
|---|---|
| No LED lit | No power supply (terminal 21) |
| Both | LEDs flashing red: Initialisation procedure |
| | LEDs lit green: Waiting time after switching on or after spring return |
| | LEDs are flashing red and green: Drive is in manual mode |
| Upper | LED lit red: Upper limit stop or 'CLOSED' position reached |
| | LED flashing green: Drive running, moving towards 'CLOSED' position |
| | LED lit green: Drive stationary, last direction of running 'CLOSED' |
| Lower | LED lit red: Lower limit stop or 'OPEN' position reached |
| | LED flashing green: Drive running, moving towards 'OPEN' position |
| | LED lit green: Drive stationary, last direction of running 'OPEN' |

## Additional technical information

The yellow housing, comprising the front section, rear section and connection cover, only serves the purpose of a cover. The crank for manual adjustment is located on the front. The dc motor, the control electronics, the supporting components and the maintenance-free gear are accommodated in the housing.

**Note on ambient temperatures:** If the medium temperature in the valve is up to 110 °C, the ambient temperature may reach 60 °C. For medium temperatures above 110 °C, the ambient temperature must not exceed 55 °C.

## High Temperature Extension:

The extension kit is to be used on applications above 130 °C to up to 240 °C. There are two kit options of up to 180 °C and another for up to 240 °C

1. Unscrew the actuator mounting plate screws for pillars.
2. Screw the extension pillars into actuator pillars and tighten to 12 Nm.
3. Screw the actuator mounting plate screws into pillars and tighten to 25 Nm.
4. Mount the coupling extension into the actuator coupling until it snaps closed.

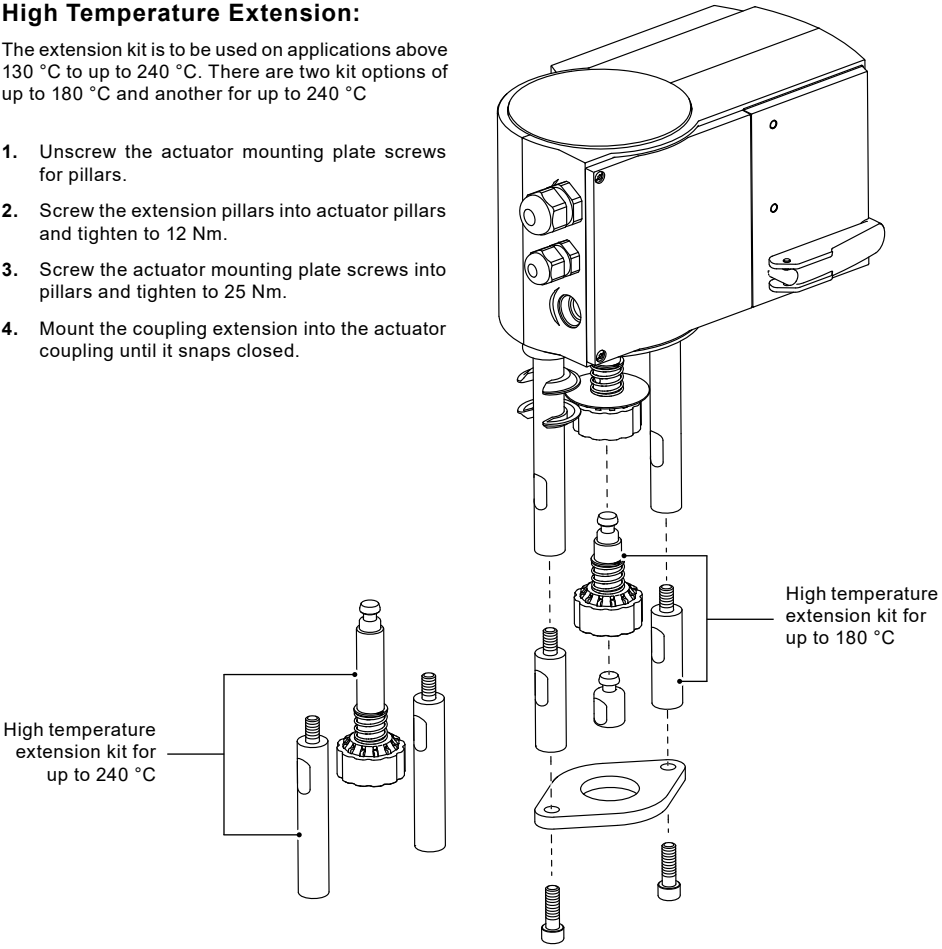


## Warnings:

- If the temperature of the medium in the valve is high, the drive columns and the shaft may also reach high temperatures.
- Drives with safety functions must be regularly checked to see that they are in working order (trial run).
- If a failure of the final control element could cause damage, additional protective precautions must be taken.
- It is forbidden to dismantle the springs in the device due to the high risk of injuries.

# 6. Flow settings

## Table 1 Blowdown valve capacities

| Valve size | DN15 | DN20 | DN25 | DN32 | DN40 | DN50 |
|---|---|---|---|---|---|---|
| Kv value | 0.5 | 0.5 | 0.5 | 1.6 | 1.6 | 1.6 |

**For conversion:**
Cv (UK) = Kv x 0.963
Cv (US) = Kv x 1.156

## Kv chart

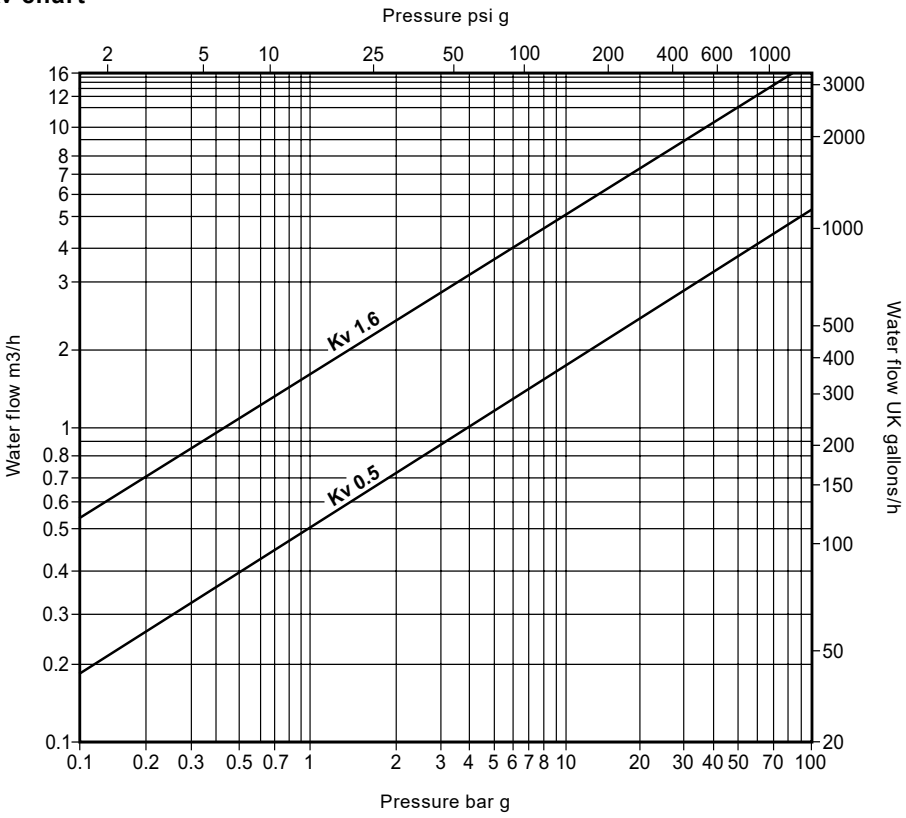

## Capacities

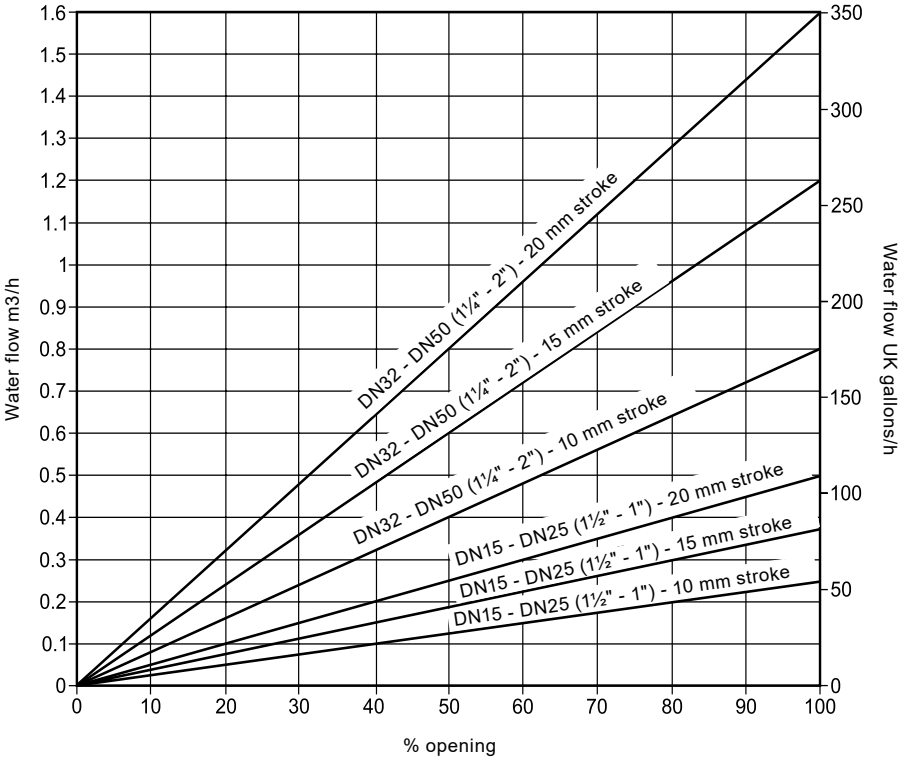
Water flow m3/h
1.6
1.5
1.4
1.3
1.2
1.1
1
0.9
0.8
0.7
0.6
0.5
0.4
0.3
0.2
0.1
0
Water flow UK gallons/h
350
300
250
200
150
100
50
0
0
10
20
30
40
50
60
70
80
90
100
% opening
DN32 - DN50 (1¼" - 2") - 20 mm stroke
DN32 - DN50 (1¼" - 2") - 15 mm stroke
DN32 - DN50 (1¼" - 2") - 10 mm stroke
DN15 - DN25 (1½" - 1") - 20 mm stroke
DN15 - DN25 (1½" - 1") - 15 mm stroke
DN15 - DN25 (1½" - 1") - 10 mm stroke

## Flow for stroke 20 mm

| Kv | Differential pressure (bar) | Hot water flow ($m^3/h$) | Valve size |
|---|---|---|---|
| 0.5 | 0 | 0.0 | DN15 to DN25 |
| | 0.5 | 0.4 | |
| | 1 | 0.5 | |
| | 10 | 1.6 | |
| | 20 | 2.2 | |
| | 30 | 2.7 | |
| | 40 | 3.2 | |
| 1.6 | 0 | 0.0 | DN32 to DN50 |
| | 0.5 | 1.1 | |
| | 1 | 1.6 | |
| | 10 | 5.1 | |
| | 20 | 7.2 | |
| | 30 | 8.8 | |
| | 40 | 10.1 | |

## Flow for stroke 15 mm

| Kv | Differential pressure (bar) | Hot water flow ($m^3/h$) | Valve size |
|---|---|---|---|
| 0.375 | 0 | 0.0 | DN15 to DN25 |
| | 0.5 | 0.3 | |
| | 1 | 0.4 | |
| | 10 | 1.2 | |
| | 20 | 1.7 | |
| | 30 | 2.1 | |
| | 40 | 2.4 | |
| 1.200 | 0 | 0.0 | DN32 to DN50 |
| | 0.5 | 0.8 | |
| | 1 | 1.2 | |
| | 10 | 3.8 | |
| | 20 | 5.4 | |
| | 30 | 6.6 | |
| | 40 | 7.6 | |

## Flow for stroke 10 mm

| Kv | Differential pressure (bar) | Hot water flow ($m^3/h$) | Valve size |
|---|---|---|---|
| **0.25** | 0 | 0.0 | **DN15 to DN25** |
| | 0.5 | 0.2 | |
| | 1 | 0.3 | |
| | 10 | 0.8 | |
| | 20 | 1.1 | |
| | 30 | 1.4 | |
| | 40 | 1.6 | |
| **0.80** | 0 | 0.0 | **DN32 to DN50** |
| | 0.5 | 0.6 | |
| | 1 | 0.8 | |
| | 10 | 2.5 | |
| | 20 | 3.6 | |
| | 30 | 4.4 | |
| | 40 | 5.1 | |

# 7. Rotating the electrical actuator

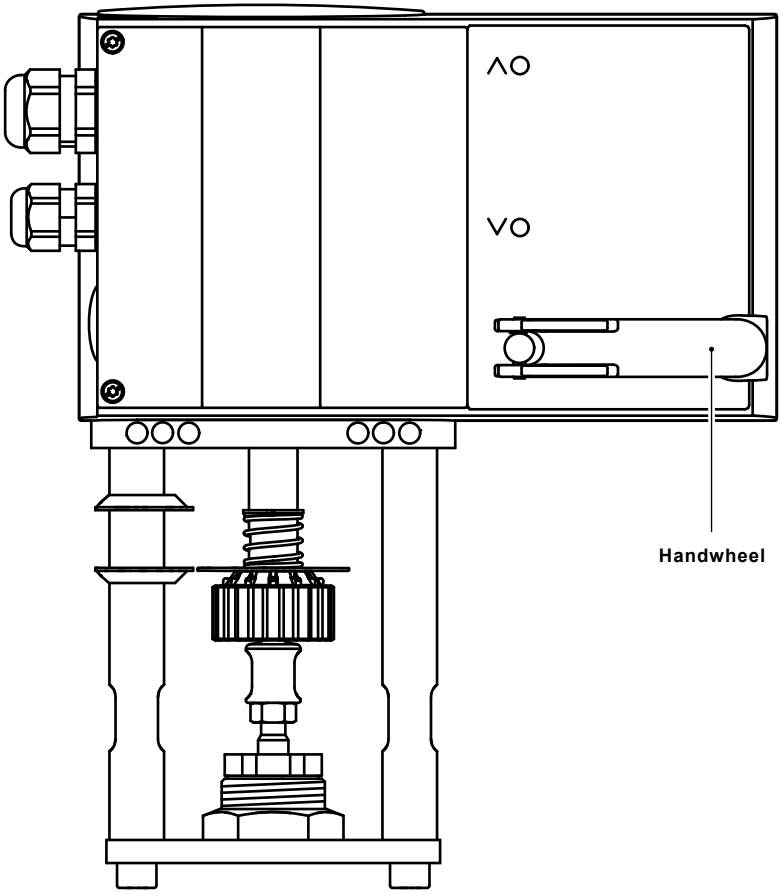


The actuator may be rotated on the valve body so that the terminal cover points are in the most convenient direction.

**Fig. 9**

# 8. Wiring

All wiring materials and methods shall comply with relevant EN and IEC standards where applicable. For installations in the US and Canada, the controller and valve must be wired in accordance to the Local and National Electrical code (NEC) or the Canadian Electrical Code (CEC).
Check the actuator label to ensure the operating voltage is correct for the mains supply.

**Suitable ac voltages are:**

| | |
|---|---|
| 230 V version (additional card) | 195 V - 265 V |
| 110 V version (additional card) | 96 V - 127 V |
| 24 V version | 19.3 V - 28 V |
| Frequency | 50 - 60 Hz |
| Maximum power consumption | 12W/28VA |

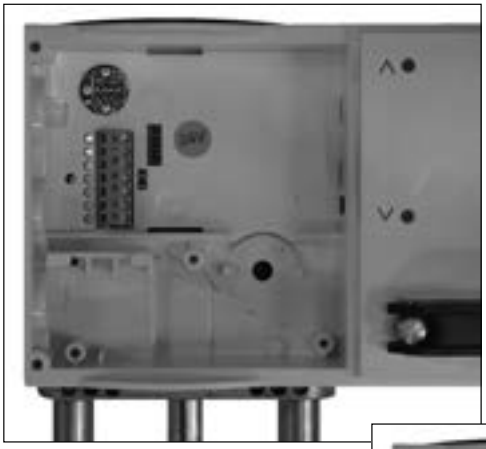

**Fig. 10**

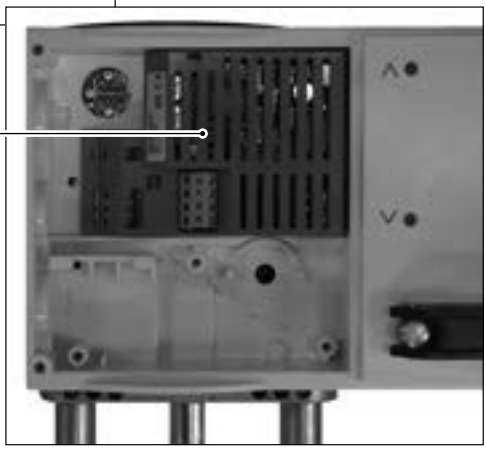


**Fig. 11**

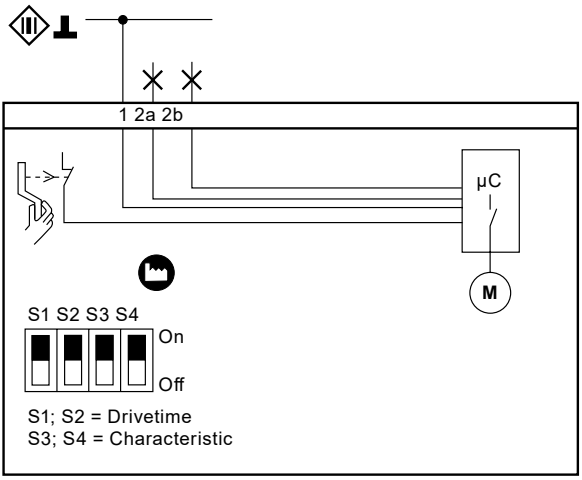


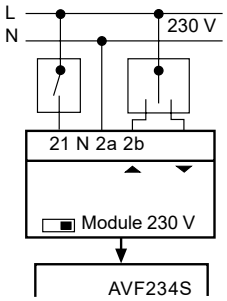


2a Valve opening
2b Valve closing

**Fig. 12**

## Limit switches configuration

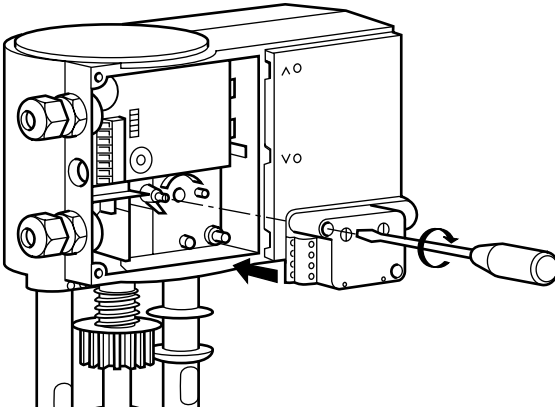

**Fig. 13**

The limit switches box is already installed in the actuator cover.
Xs1 = Adjust to positioning the valve opening
Xs2 = Adjust to positioning the valve closing
**Note:** The Xs2 is set-up during the coupling with the valve consequently it cannot be altered.

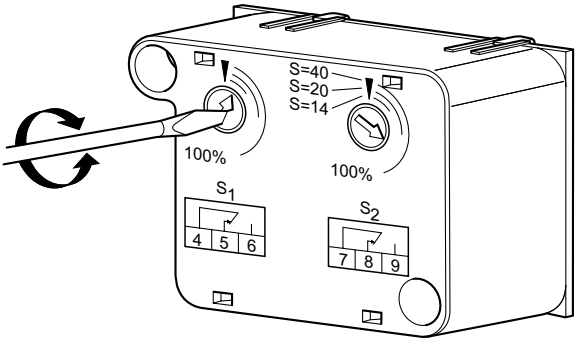


**Fig. 14**

Turn the potentiometers Xs1 to adjust the stroke to the optimum for your application.
**1.** Set the potentiometer
**2.** Measure the stroke of the valve
**3.** Adjust the set-up of the potentiometer

# 9. Pneumatic actuator stroke adjustment

The valve is supplied with a low flowrate setting of 10 mm (⅜") stroke.
**To increase the stroke to 15mm (⅝") or 20 mm (¾"):**

**9.1** Isolate the valve from the boiler pressure and energise the solenoid valve so that the air supply can be manually controlled by the regulator.

**9.2** Apply just enough air pressure to open the valve fully (see Figure 15).

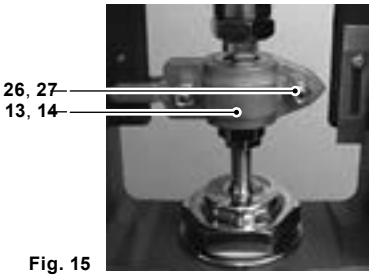


**Fig. 15**

**9.3** Remove the clamp nuts and screws (**26** and **27**), and the clamp front and rear (**13** and **14**).

**9.4** Activate the air supply and allow the actuator to retract fully (see Figure 15).

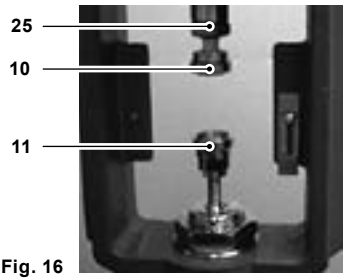


**Fig. 16**

**9.5** Loosen the actuator lock-nut (**25**), and screw the connector (**10**) fully into the spindle.

**9.6** Loosen the nut locking the valve stem to the adaptor (**11**).

**9.7** Position the adaptor so that only 8 mm of the valve stem thread is engaged (see Figures **17** and **18**).



**Fig. 17**
**Correct - 8 mm thread engagement**

**Caution**
The valve stem must not protrude beyond the surface of the adaptor, otherwise the clamp will not fit corectly and may be damaged (see Figure 18).

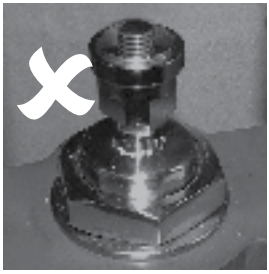

**Fig. 18**
**Incorrect - thread protruding above the adaptor**

**9.8** Pull the valve stem upwards to fully close the valve.

**9.9** Measuring from the top of the stuffing box, mark the new stroke required on the valve stem - 15 mm or 20 mm (Figure 19).



**Fig. 19**

**9.10** Push the valve stem down so that the mark lines up with the stuffing box (Figure 20).

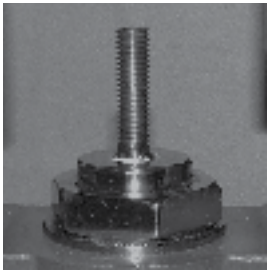

**Fig. 20**

**9.11** Remove the air supply to allow the actuator to descend fully.

**9.12** Unscrew the actuator connector until it just contacts the valve stem adaptor without opening the valve (Figure 21).

**9.13** Tighten adaptor and actuator lock-nuts.

**9.14** Refit the clamp, and its nuts and screws.



**Fig. 21**

**Please note:**
It may be necessary to make final adjustments to the actuator connector and the valve adaptor to ensure the clamp anti-rotation lugs engage with the yoke, and that the pointer is still on the scale.

# 10. Maintenance

**Note:** Before actioning any maintenance, observe the 'Safety information' in Section 1.

### Warning for all stainless steel valves

The 316 type stainless steel used in the construction of these products particularly for screwed or close fitting parts, is very susceptible to galling or cold welding. This is an inherent characterisitic of this type of material and great care should therefore be taken when dismantling or reassembling.
If the application permits, it is recommended that a light smear of a PTFE based grease is applied to any mating parts before reassembly.

## 10.1 General

Valve parts are subject to normal wear and must be inspected and replaced as necessary. Inspection and maintenance frequency depends on the severity of the service conditions. This section provides instructions on replacement packing, stem, plug and seat and bellows. All maintenance operations can be performed with the valve body in the line.

### Annually

The valve should be inspected for wear and tear replacing any worn or damaged parts such as valve plug and stem, valve seat and gland seals, refer to Section 10 'Spare parts'.

**Note 1:** High temperature graphite packed seals are subject to wear during normal operation. We therefore recommend the graphite packing be replaced during this routine inspection to prevent premature failure of the packing during normal operation.

**Note 2:** It is recommended that all soft seals and gaskets be replaced whenever the valve is disassembled.

### New torque values with lubrication:

The following new torque values should be used with lubricated nuts/bolts:

### Table 2

Recommended tightening torques - Control valve sizes DN15 to DN50

| SPIRA-TROL valve size | Torque (N m) |
|---|---|
| DN15 - DN25 | 50 |
| DN32 - DN50 | 70 |

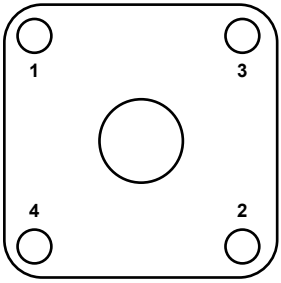


**Fig. 22**
**Bonnet tightening sequence**

## 10.2 Removal of valve bonnet

**Note:** This procedure is necessary before carrying out any of the maintenance procedures detailed below:

**10.2.1** Ensure that the valve is depressurised and clear of media and isolate it both upstream and downstream.

**10.2.2** **Caution:** care should be taken when disassembling the valve in case of residual pressure being trapped between the isolation points.

**10.2.3** Remove the actuator from the valve. Refer to the Installation and Maintenance Instructions covering Spirax Sarco actuators.

**10.2.4** Unscrew the stuffing box nuts (**18**).

**10.2.5** Undo and remove the bonnet nuts (**27**).

**10.2.6** Remove the bonnet (**2**) and plug and stem assembly (**8**)

**10.2.7** Remove and discard the body gasket.

## 10.3 Replacement of graphite gland packing

**10.3.1** Remove the lock-nut (**3**), stuffing box nuts, gland flange and gland follower (**18**), ensuring that the groove is clean and undamaged, replace with new item.

**10.3.2** Remove the gland follower (**9**) and retain, withdraw the graphite packing (**14**) and discard. Remove the spacer and lower bearing (**16**).
Clean and examine these components and the upper bearing replacing any that show signs of damage or deterioration.

**10.3.3** Clean the gland cavity and reassemble the gland components in the order shown in Figure 23. **Note** that the lower bearing must be fitted with the radiused edge downwards.
When fitting the graphite seals, the scarf joints in each seal must be offset from the one below by 90°.

**10.3.4** Fit the packing follower and stuffing box ring into position.
Lubricate the stuffing box nuts.
Install and tighten the packing flange nuts finger tight. and hold the packing without compressing them.

**10.3.5** Final adjustment of the gland must be carried out after refitting the bonnet as detailed in Section 10.5.

**Fig. 23**

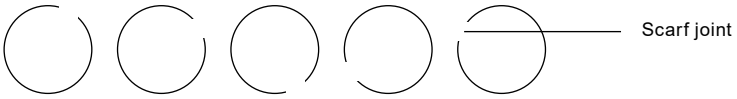

## 10.4 Removal and refitting of the valve plug/stem assembly and seat

**10.4.1** Lift out the seat retaining cage (5) followed by the seat (6).

**10.4.2** Remove the seat back gasket (7) and discard.

**10.4.3** Clean all components, including the seat recess in the valve body.

**10.4.4** Examine the seat and plug/stem assembly for damage or deterioration and renew as necessary.

**10.4.5** **Note:** Score marks or scaly deposits on the valve stem will lead to early failure of the gland seals and damage to seat and plug sealing faces will result in leakage rates higher than those specified for the valve.

**10.4.6** Fit a new seat gasket (7) in the body seat recess followed by the seat (6).

**10.4.7** Refit the cage (5) ensuring that the flow windows are lower most and that it sits squarely on the seat without impinging on the valve body.

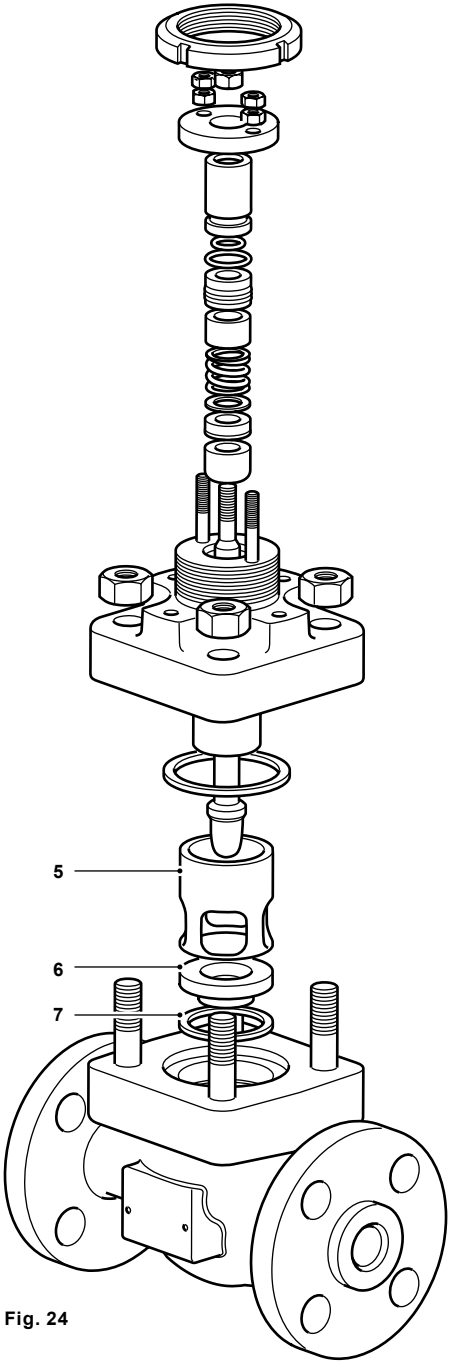


Fig. 24

## 10.5 Refitting the bonnet

**Caution:** The following must be carefully followed to enable the correct reassembly of the control valve, and the subsequent test that is required to ensure that the plug moves freely inside the valve seat:

**10.5.1** Fit new bonnet gasket.

**10.5.2** Ensure the plug stem is fully extended without the upper stem threads making contact with stem seals on the top of the bonnet.

**10.5.3** Replace the bonnet and stem assembly to the valve body, locating the plug centrally into the seat.

**10.5.4** Holding the Plug in position, push the bonnet down on to the valve body.

**10.5.5** Proceed to tighten the bonnet into position by following Step 1 through to 7:




Fit bonnet nuts.

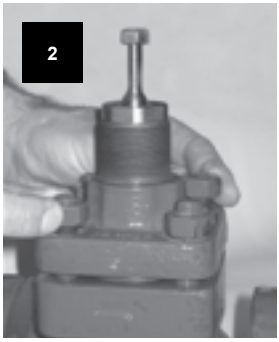


Finger tighten opposing bonnet nuts or bolts evenly in pairs.




Raise the stem to the highest position.




Firmly and briskly push the stem fully down.

Repeat Steps 1 to 4 finger tightening bonnet nuts or bolts individually until tight.




Using a torque wrench lightly and evenly tighten each bolt or nut by 45°, following the sequence illustrated in Figure 22.




After each tightening sequence lift the stem fully.

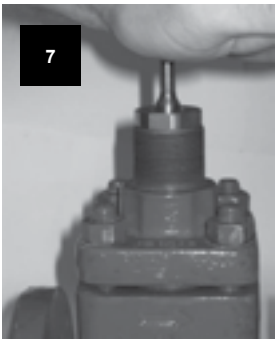


Firmly and briskly push the stem fully down.

**10.5.6** Repeat Steps 5, 6 and 7 until the bonnet nuts or bolts have an even tension

**10.5.7** Continue Steps 5, 6 and 7 but use a torque wrench set at 10% of maximum required torque setting.

**10.5.8** Again, repeat Steps 5, 6 and 7, incrementally increasing the torque value to 20%, 40%, 60%, 80% and finally 100% of the required torque value (as specified in Table 2).

**10.5.9** Pull the plug off its seat, rotate by 120° and slowly push it back down into the seat checking for any signs of resistance as the plug comes into contact with the seat.

**10.5.10** Repeat the above Step, three more times.

**10.5.11** If any resistance is felt, this can indicate the plug and seat is misaligned and the process will need repeating.

**10.5.12** Tighten the the stuffing box nuts (18) until:
**i)** PTFE gland assembly: A gap of 10 mm between the underside of the gland flange and the bonnet is achieved.
**ii)** Graphite gland assembly: A gap of 12 mm between the underside of the gland flange and the bonnet is achieved.

**10.5.13** Refit the lock-nut (3).

**10.5.14** Reinstall the actuator.

**10.5.15** Bring the valve back into service.

**10.5.16** Check for leakage at the gland.

**Note:** Recheck the graphite seals and retighten the gland if necessary after a few hundred cycles as the seals fully bed in.

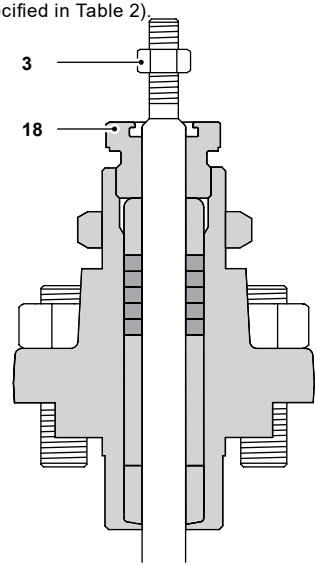


**Fig. 25**

# 11. Spare parts

## Spare parts

The spare parts available are detailed below. No other parts are supplied as spares.

**Please note** that the spare parts available for the BCV blowdown control valve are the same for both the electrically and pneumatically actuated versions.

## Available spares

| | | |
|---|---|---|
| Actuator clamping nut (only for high pressure version) | | **A** |
| Gasket set | | **B, G** |
| Stem seal kits | Graphite packing | **C1** |
| Plug stem and seat kit | Linear trim (No gaskets supplied) | **D2, E** |

## How to order spares

Always order spares by using the description given in the column headed 'Available spares', and state the size and type of valve and specify clearly the full product description as found on the label of the valve body, as this will ensure that the correct spare parts are supplied.

**Example: 1** off Actuator clamping nut for a Spirax Sarco DN15 BCV43HWSUSS blowdown control valve.

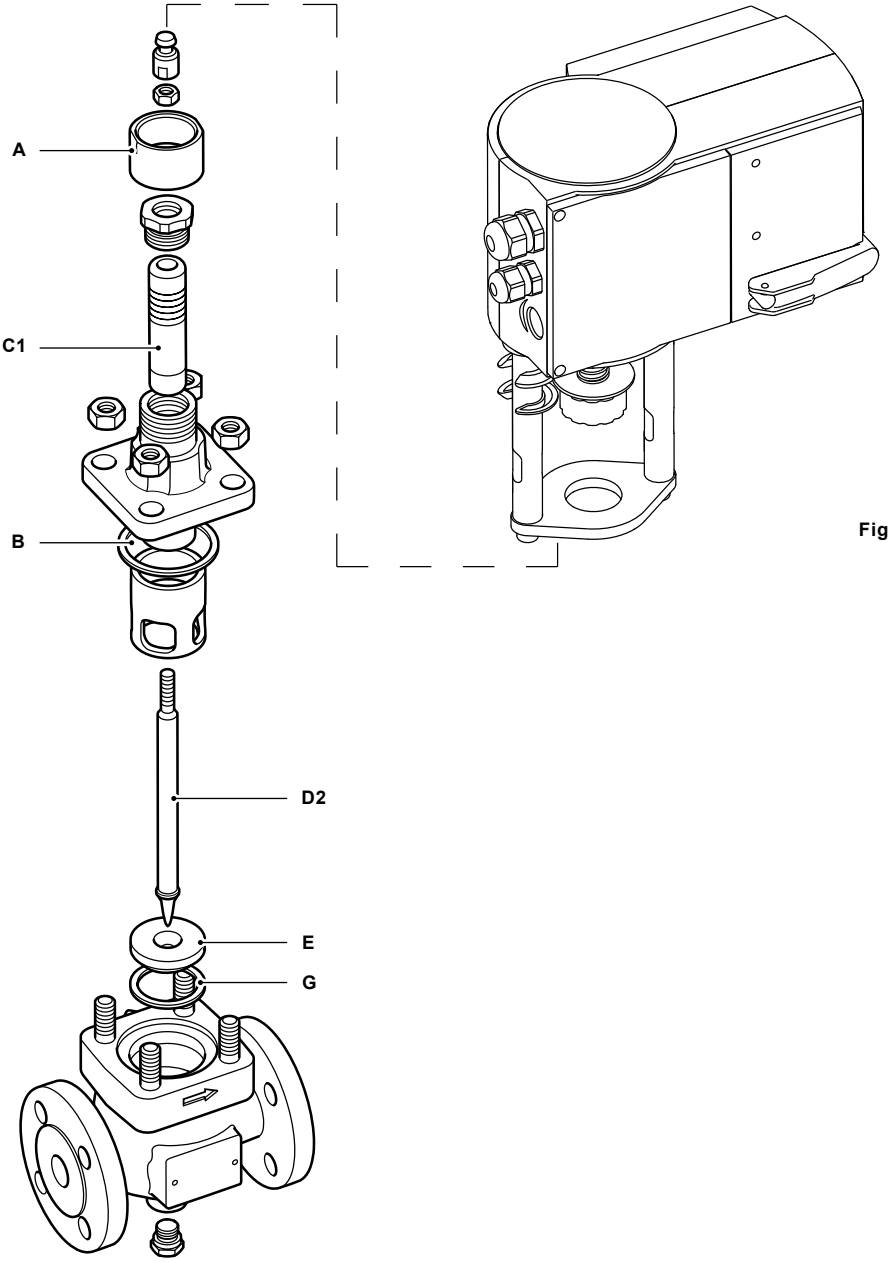


Fig. 26